SHIRE CANAL BOAT ENGINE MANUAL

For the following engine models:

SHIRE 14 30

SHIRE 14 35

SHIRE 14 38

SHIRE 14 40

SHIRE 14 45

SHIRE 14 50

BARRUS

Est. 1917

SHIRE

Enter your engine identification details in the spaces provided above.

E. P. BARRUS LIMITED, Launton Road, Bicester, Oxfordshire. OX26 4UR

Tel: 01869-363636 Fax: 01869-363610 www.barrus.co.uk

RDG603A8 - Issue 1 - Shire 14 Canal Boat Complete Manual 30, 35, 38, 40, 45, 50.doc

Declaration of Conformity for Recreational Craft Propulsion Engine with the requirements of Directive 94/25/EC as amended by 2003/44/EC.

Name of Engine Manufacturer: **Yanmar Co LTD.**
Address: **Yanmar Europe B.V, Brugplein 11, 1332 BS Almere-de Vaart, Netherlands.**

Name of Authorised Representative: **E.P.Barrus LTD**
Address: **E.P.Barrus LTD, Launton Road, Bicester, Oxon, OX26 4UR, England**

Engine type approved according to: Stage II of Directive 97/68/EC, 88/77/EC

Description of Engine(s) and Essential Requirements

Engine Type: Inboard Engine **Fuel Type**: Diesel **Combustion Cycle**: 4 Stroke

Identification of Engine(s) covered by this Declaration of Conformity

Engine Model	**Engine Type**	**Engine Family code**	**Type Approval Certificate Number**
Shire 30 / 35	3 TNV 82 A BDSA	G2YDXCL0133MN	e13*97/68DA*2001/63*0558*06
Shire 38 / 40 / 45 / 50	4 TNV 88 DSA	5YDXL2.19K4N	e13*97/68DA*2001/63*0574*06
Shire 70	4 TNV 98 NSA	YD3300DNMGEC	e13*97/68GA*2001/63*0545*11

Essential Requirements	Standards	Other normative document/method.	Technical file	Specify in more detail *= Mandatory standard.
Annex 1.B- Exhaust Emissions				
B.1 Engine Identification	☐	☐	☐	
B.2 Exhaust emission requirements	☐*	☐	☐	* EN ISO 8178- 1:1996
B.3 Durability	☐	☐	☐	
B.4 Owners Manual	☐	☐	☐	
Annex 1. C- Noise Emissions	See Declaration of Conformity of the craft in which the engine(s) has(have) been installed			

This declaration of conformity is issued under the sole responsibility of the manufacturer. I declare on behalf of the engine manufacturer that the engine(s) [is (are) in conformity with the type(s) for which above mentioned EC type-examination or type approval certificate(s) has (have) been issued and][1] will meet the exhaust emission requirements of Directive 94/25/EC as amended by Directive 2003/44/EC when installed in a recreational craft, in accordance with the engine manufacturer's supplied instructions and that this (these) engine(s) must not be put into service until the recreational craft which it is (they are) to be installed has been declared in conformity with the relevant provisions of the above mentioned Directives.

Tim Hart
Sales Director
Signed: Bicester, UK

PLEASE NOTE:

This manual has been compiled to help you to operate your engine and its associated parts with safety and pleasure. Please read it carefully and familiarise yourself with the engine and its parts before operation.

E.P.Barrus reserve the right to change the specification of its products and manuals without prior notice.

Depending upon the equipment specification of the engine and accessories fitted, there may be discrepancies with the information presented in this handbook. No claims may be pursued in this respect.

WARNING:

THIS MANUAL FORMS AN INTEGRAL PART OF THE ENGINE IT ACCOMPANIES, IF A TRANSFER OF TITLE OCCURS, IT MUST ALWAYS BE HANDED OVER TO THE NEW OWNER.

WARRANTY

This Limited Warranty provides coverage for five (5) years (or 2000 hours whichever occurs first) for recreational users and three (3) years (or 2000 hours whichever occurs first) for commercial users from the date of warranty registration. The repair or replacement of parts, or the performance of service under this warranty, does not extend the life of this warranty beyond its original expiry date.

To ensure that you have been registered for your warranty, please ask your Boat-Builder or Engine supplier to provide your portion of the registration form.

PRM gearboxes are covered by a three (3) year warranty for recreational users and two (2) years for commercial users.

Engine alternator, starter motor and electrical components are only covered by a one (1) year warranty.

CONDITIONS THAT MUST BE MET IN ORDER TO OBTAIN WARRANTY COVERAGE

Warranty coverage is only available from an authorised dealer in the country in which the sale occurred. Routine maintenance outlined in the Owner's Manual must be performed using genuine parts in order to maintain warranty coverage. If the customer performs maintenance, Barrus reserves the right to make future warranty coverage possible only with proof of proper maintenance.

WARRANTY CLAIMS

Warranty claims shall be made by an authorised dealer or boat builder.

The dealer or boat builder will then arrange for the inspection and any necessary repairs. If the repairs carried out are not covered by the warranty, purchaser shall pay for all related labour and material, and any other expenses associated with that service.

WHAT IS NOT COVERED

This limited warranty does not cover routine maintenance items, adjustments, normal wear and tear, damage caused by abnormal use, operation of the product in a manner inconsistent with the recommended operation/duty cycle section of the Owners Manual, accident, submersion, improper installation (proper installation specification and techniques are set forth in the Operations and First time running sections in this manual), use of an accessory or part not manufactured or sold by us, or alteration or removal of parts. Expenses related to crane-out, launch, towing, storage, telephone, rental, inconvenience, slip fees, insurance coverage, loan payments, loss of time, loss of income, or any other types of accidental or consequential damages are not covered by this warranty.

Engine electrical systems fitted with alternator boost charge systems or any other electrical management systems are not covered by warranty.

Engine and fuel equipment is not covered by warranty if bio-diesel is used in the fuel system. Also if no type of water trap is incorporated into fuel system.

Contents

SECTION 1 - Safety Precautions.....7

1. General..... 7
2. Lifting..... 7
3. Rotating Shafts and Belts..... 7
4. Exhaust System..... 7
5. Launching and Lifting Boats..... 7
6. Batteries..... 8

SECTION 2 - Engine Identification.....9

SECTION 3 - Installation.....10

1. Ventilation..... 10
2. Engine Beds..... 10
3. Cooling System..... 10
4. Skin Tanks..... 10
5. Engine Cooling Water Inlet and Outlet Hose Connections..... 11
6. Pressurised Water Header Tank..... 11
7. Shaft Connection and Propeller Selection..... 17
8. Engine Anti-Vibration Mounts..... 17
9. Engine Alignment..... 19
10. Electrics..... 20
11. Electrical Options..... 20
12. Engine Oil..... 21
13. Fuel..... 21
14. Coolant..... 22
15. Calorifier..... 22
16. Control Cables..... 22
17. Domestic Battery Bank..... 23
18. Control Panel..... 23
19. Exhaust System..... 24
20. Hydraulic Drive Transmissions..... 24
21. Hydraulic Pump Drive Option (Shire 38 / 40 / 45 / 50)..... 25
22. Installation Check list..... 26

SECTION 4 - Operation.....27

1. Starting the Engine for the First Time..... 27
2. Starting Procedure..... 27
3. Stopping Procedure..... 28

4. Full Load Running 28
5. Refuelling 28
6. Twin Thermostats – Shire 45 and 50 28
Diesel Fuel Additive 30
7. Exhaust Back Pressure 30
SECTION 5 - Service Procedure 30
1. Engine Oil and Filter Change 30
2. Air Filter Check & Change 31
3. Gearbox Oil Change 31
4. Disposal of Oil and Related Items 33
5. Primary Fuel Filter Water Drain – Shire 30, 35, 40, 45 & 50 33
6. Primary and Secondary Fuel Filter Change 34
7. Fuel System Bleeding 35
8. Cooling System 35
9. Belt Adjustment 36
10. Belt Maintenance 36
11. Belt Replacement 36
12. Dash Panel Maintenance 37
SECTION 6 - Service Schedule 38
Specifications and Capacities 38
Service Intervals 38
SECTION 7- Wiring Diagrams 39
1. Engine Wiring Diagram Shire 30, 35, 38 & 40 39
2. Engine Wiring Diagram Shire 30 & 35 (with Glowplugs) 40
3. Engine Wiring Diagram Shire 45, 50 & 70 (Shire 40 with optional 240A Alt) 41
4. Standard Panel Wiring Diagram 42
5. Deluxe Panel Wiring Diagram 43
6. RDG20710110 - Standard Panel 44
7. RDG20710111 – Deluxe Panel 45
SECTION 8 – Dealer List 48
SECTION 9 – Shire Service Parts 49
Shire Service Record Card 50

SECTION 1 - Safety Precautions

1. General

It is the responsibility of the installer/operator to ensure that the finished installation complies with the relevant health & safety requirements and the recreational craft directive before commissioning.

Ensure that the engine battery isolator switch is in the off position and the key removed from the control panel before carrying out any maintenance or repairs.

2. Lifting

The lifting points supplied with the engine are for lifting the engine/gearbox only. A suitable spreader bar must be employed to prevent over-stressing either bracket during any lift.

3. Rotating Shafts and Belts

The engine and its accessories are not intended to be put into operation until they are integrated into the boat as a whole. No person should be in the engine compartment and the engine cover or deck hatches should be closed whilst the engine is running.

4. Exhaust System

Exhaust gases may have temperatures as high as 650°C and contain elements which are harmful if ingested.

It is therefore essential that exhaust systems are gas tight and lagged to prevent accidental burning.

5. Launching and Lifting Boats

Care must be taken when launching or craning new boats into or out of the waterway, so that water does not enter the engine via the exhaust system or air vents. It is recommended that these are blocked temporarily whilst undertaking this procedure.

6. Batteries

WARNING:

EXPLOSIVE GASSES / SULPHURIC ACID

- Batteries can produce explosive gases; keep sparks and flames away from the battery.

NO SMOKING

- Batteries contain sulphuric acid; if splashed on skin or eyes, flush well with water and seek medical advice.
- Keep the battery tops and battery compartment ventilated at all times.
- If disconnecting the battery; remove the earth lead **FIRST**; and re-connect it last.
- If charging the battery; ensure that the charger is switched off before connecting and disconnecting.
- Do not tip the battery on its side.
- Please see label on battery or manufacturers instructions for specific information.

SECTION 2 - Engine Identification

Please quote the engine identification number during any enquiry or when ordering spare parts. Use the space below to record these details.

This can be found engraved into the brass plate on top of the engine rocker cover and stamped to the crankcase next to the starter motor.

An example of the engine identification plate is shown below:

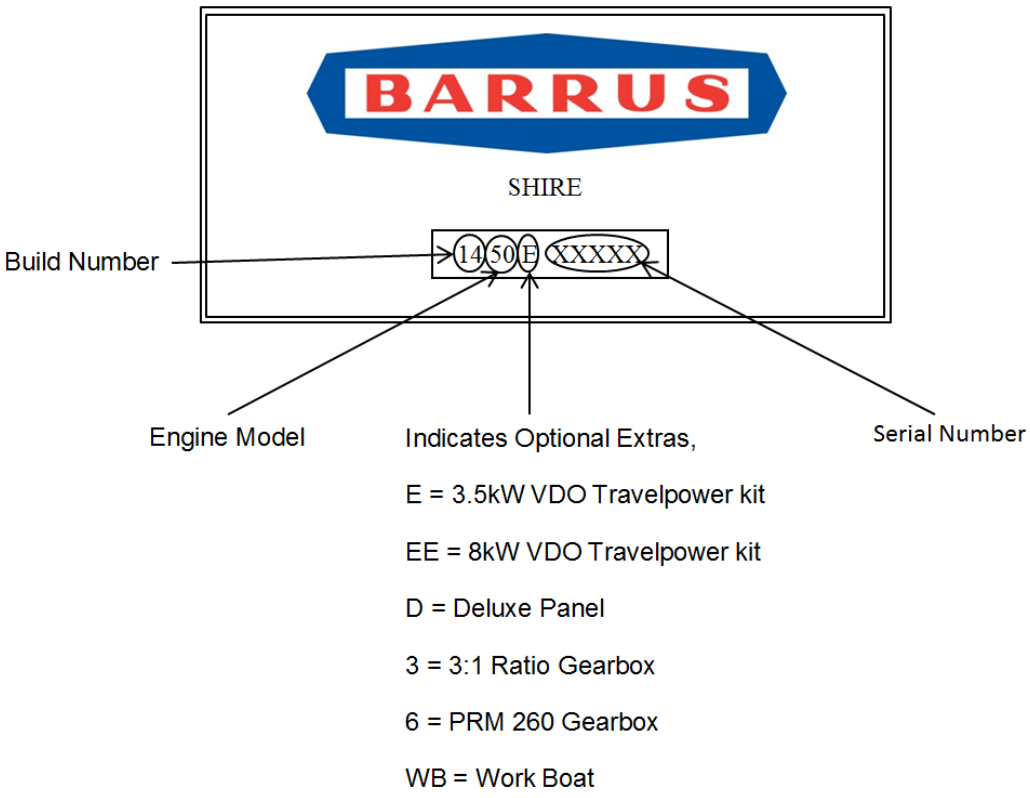

Figure 2-1: Engine Identification Badge

Note: There are a number of optional extras that may be fitted to an engine that are not listed here.

A list of common item service part numbers can be found in Shire service parts in Section 11.

SECTION 3 - Installation

1. Ventilation

- All internal combustion engines radiate heat and require cool, clean air to aid complete combustion.
- Please ensure that adequate engine room ventilation is provided, by fitting at least two vents of an aperture of not less than 10,000 mm^2 each, (16 in^2).

An allowance must be made for any grills, louvres or bends placed in the airflows and generally an increase of 25% in area is sufficient to overcome any restriction problems.

2. Engine Beds

- These should be a minimum of 10mm thick, extended rearward and be welded to the hull and forward to the bulkhead. Webs or gussets must be welded in place midway to prevent flexing.

3. Cooling System

- Ensure pipe work to and from the skin tanks is of sufficient bore. Ensure tight bends and elbows are avoided or kept to a minimum (sizes are listed overleaf).

4. Skin Tanks

- The ideal skin tank internal thickness is between 50 and 75mm, the table below will indicate a suitable tank size. However, volume will not compensate for lack of surface area. It should be recognised that fitting a large calorifier will increase the theoretical cooling capacity only until it is up to temperature. It is unlikely that a boat on the inland waterways will operate at full power for long periods of time. The engine cooling water outlets are on the right hand (starboard) side of the engine.

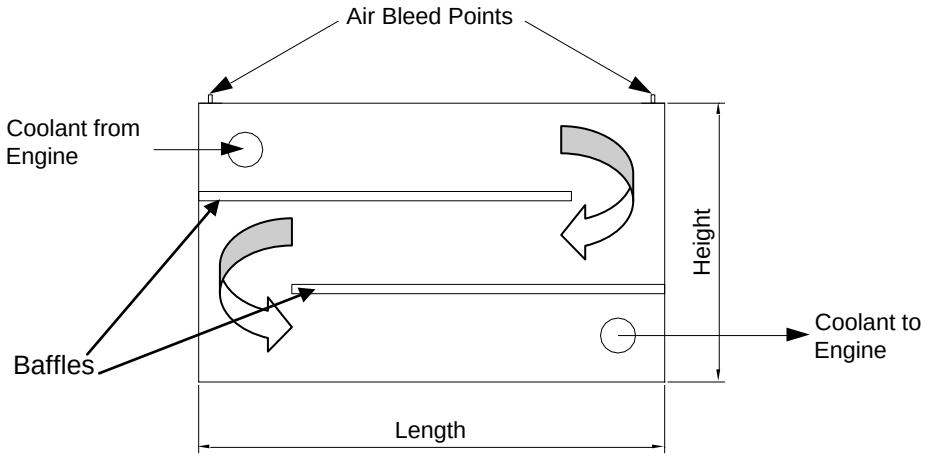

Figure 3-1: Skin Tank Flow Diagram

Recommended Skin Tank Size					
Engine	HP	KW	Skin tank Surface area m^2	Suggested Height mm	Suggested Length mm
50	50	37	1.1250	750	1500
45	45	34	1.0	721	1442
38/40	38/40	30/38	1.0	721	1442
30/35	30/35	22/26	0.85	652	1304

Note: Skin tank size must be increased by approx. 10% if a hydraulic drive transmission is fitted

5. Engine Cooling Water Inlet and Outlet Hose Connections

These are on the right hand (starboard) side of the engine:

Shire 30, 38	28mm OD, Inlet and Outlet
Shire 35, 40	28mm OD, Inlet and Outlet
Shire 45, 50	28mm OD, Inlet and 35mm OD, Outlet

Use a good quality hose that cannot collapse or kink and is capable of working at temperatures in excess of 100ºC

6. Pressurised Water Header Tank

- The pressurised header tank should be mounted higher than the level of the engine, no less than 300 mm, and no more than 1 metre from the engine, to prevent cooling

system air locks.

- Shire 50: a single hose connects the tank to the vertical hosetail fitted into the port side of the twin thermostat housing.
- Shire 30, 35, 38 40 and 45: Two hoses are used on these engines. One is fitted between the smaller internal diameter (3mm) outlet (on the left hand side of the tank) and the connection on the port side of the top of the thermostat housing (on 45 the side of the twin thermostat housing). The second hose is connected between the larger internal diameter outlet on the (right hand side of the tank) and the ½" hosetail connection on the engine pipe facing forwards and upwards at 45°. Shire 30 and 35 connections.
- A constant rise on pipework is required to prevent air locks.

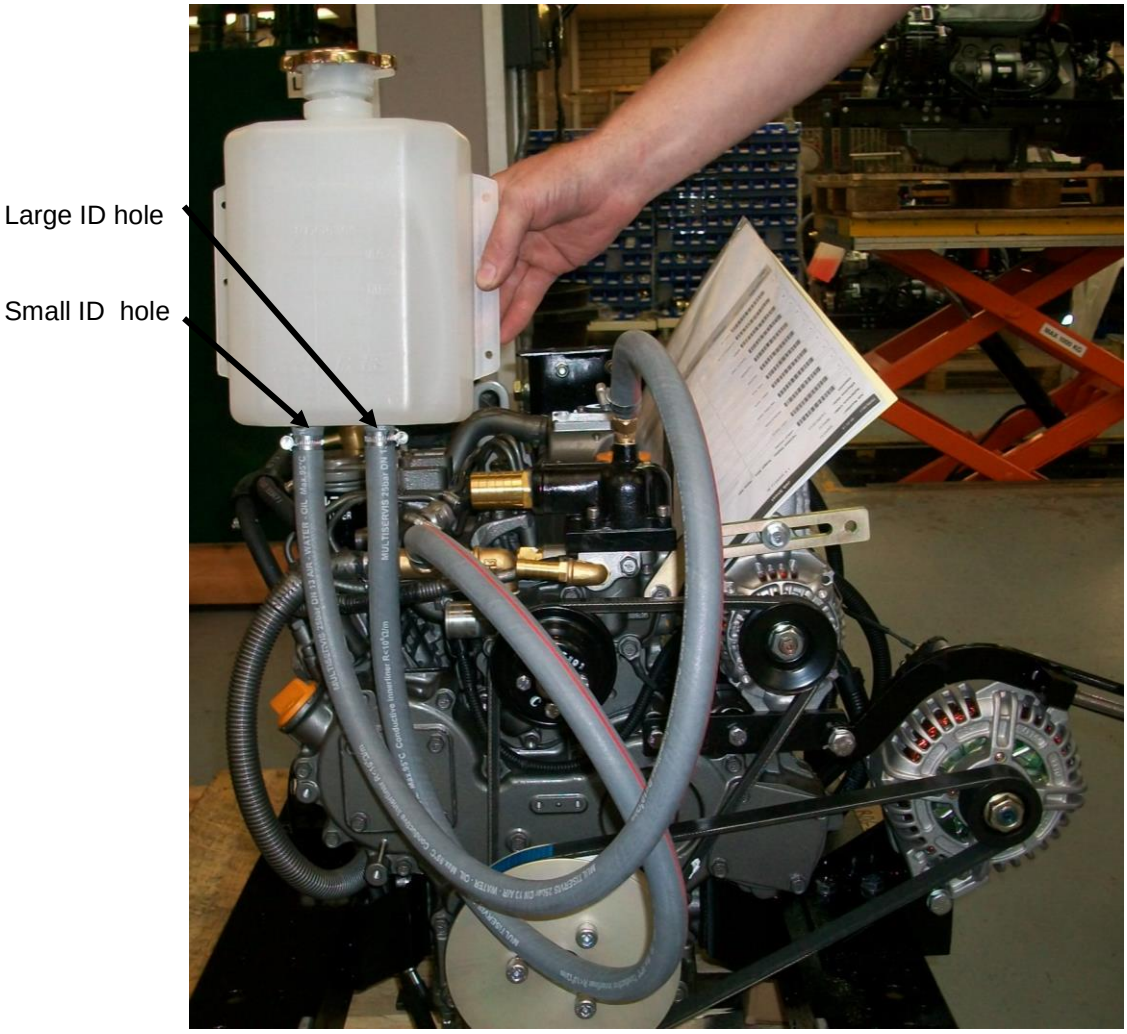

Figure 3-2: Shire 30/35 Header Tank Connections

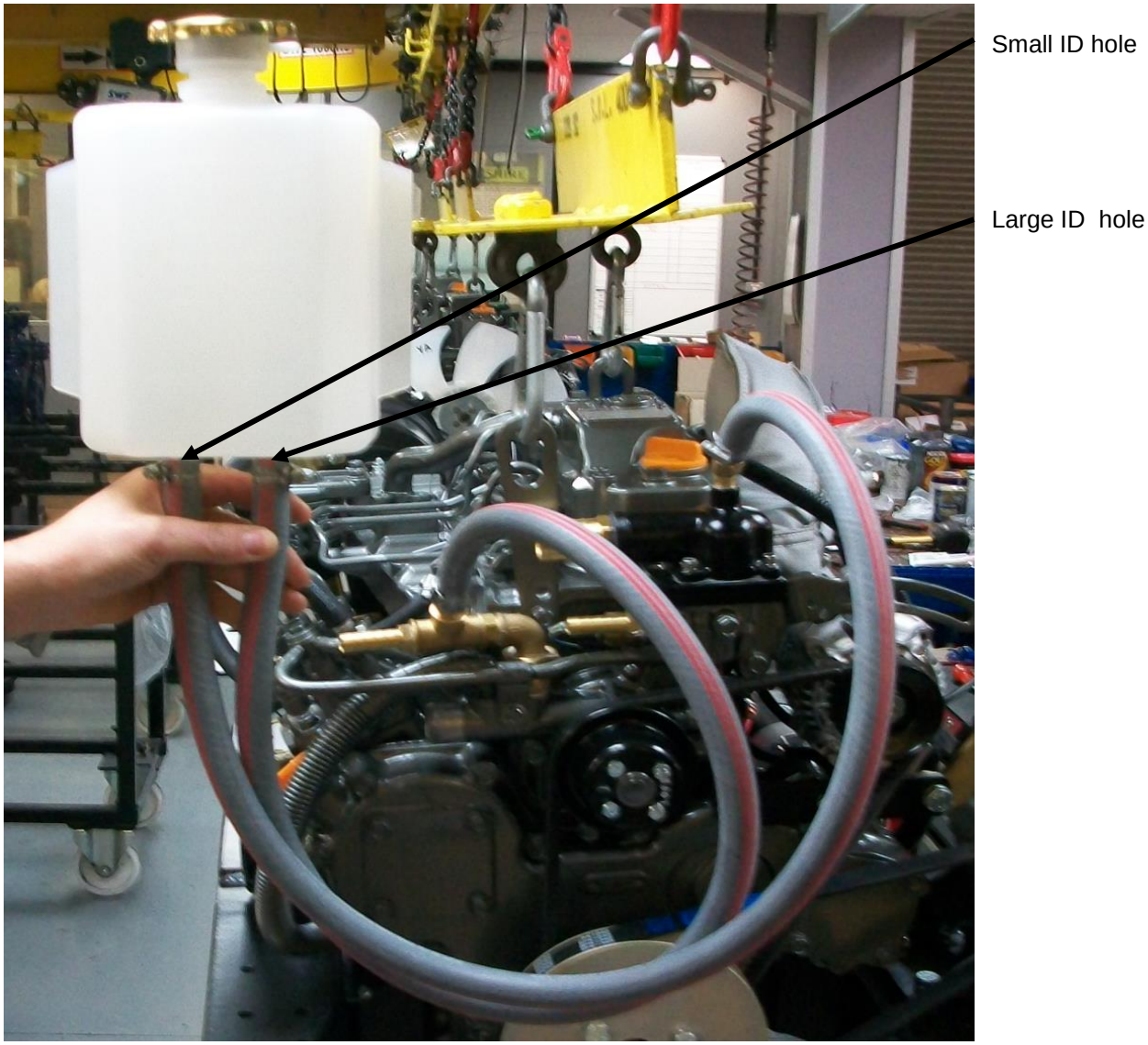

Figure 3-3: Shire 38 Header Tank Connections

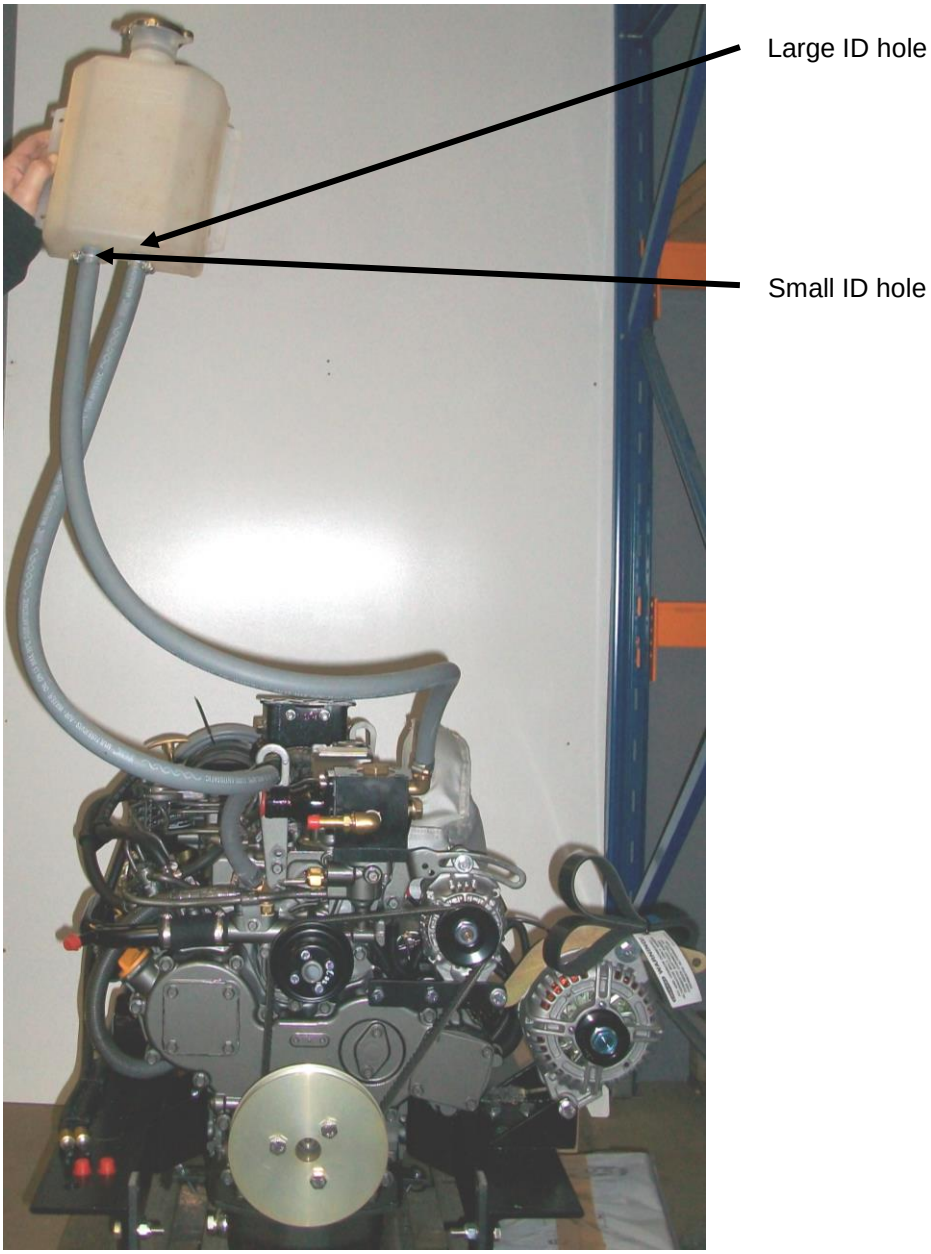

Figure 3-4: Shire 40 Header Tank Connections

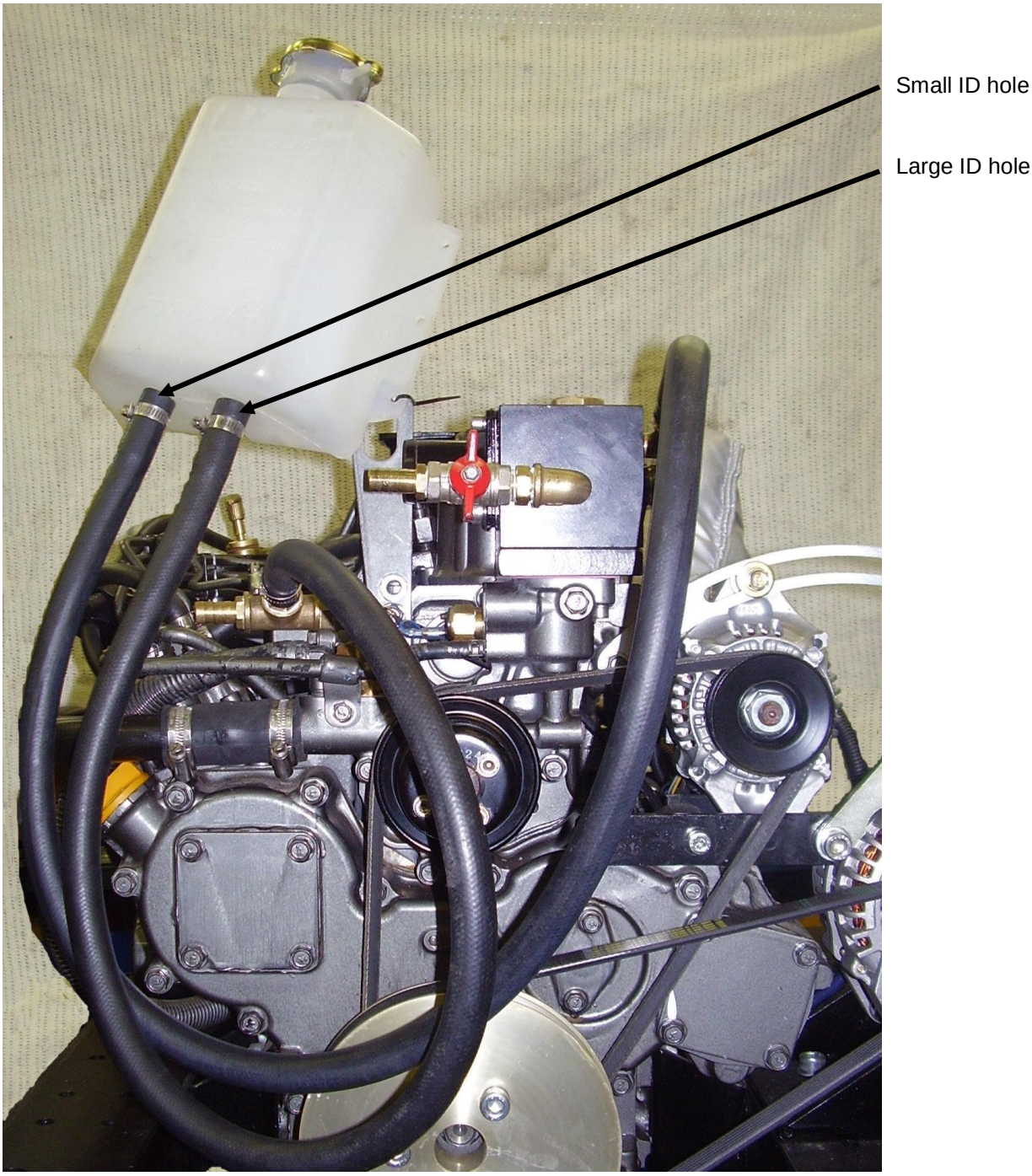

Figure 3-4: Shire 45 Header Tank Connections

- Shire 50. There is only a single hose connected to the left hand side of the bottle (3mm) outlet.

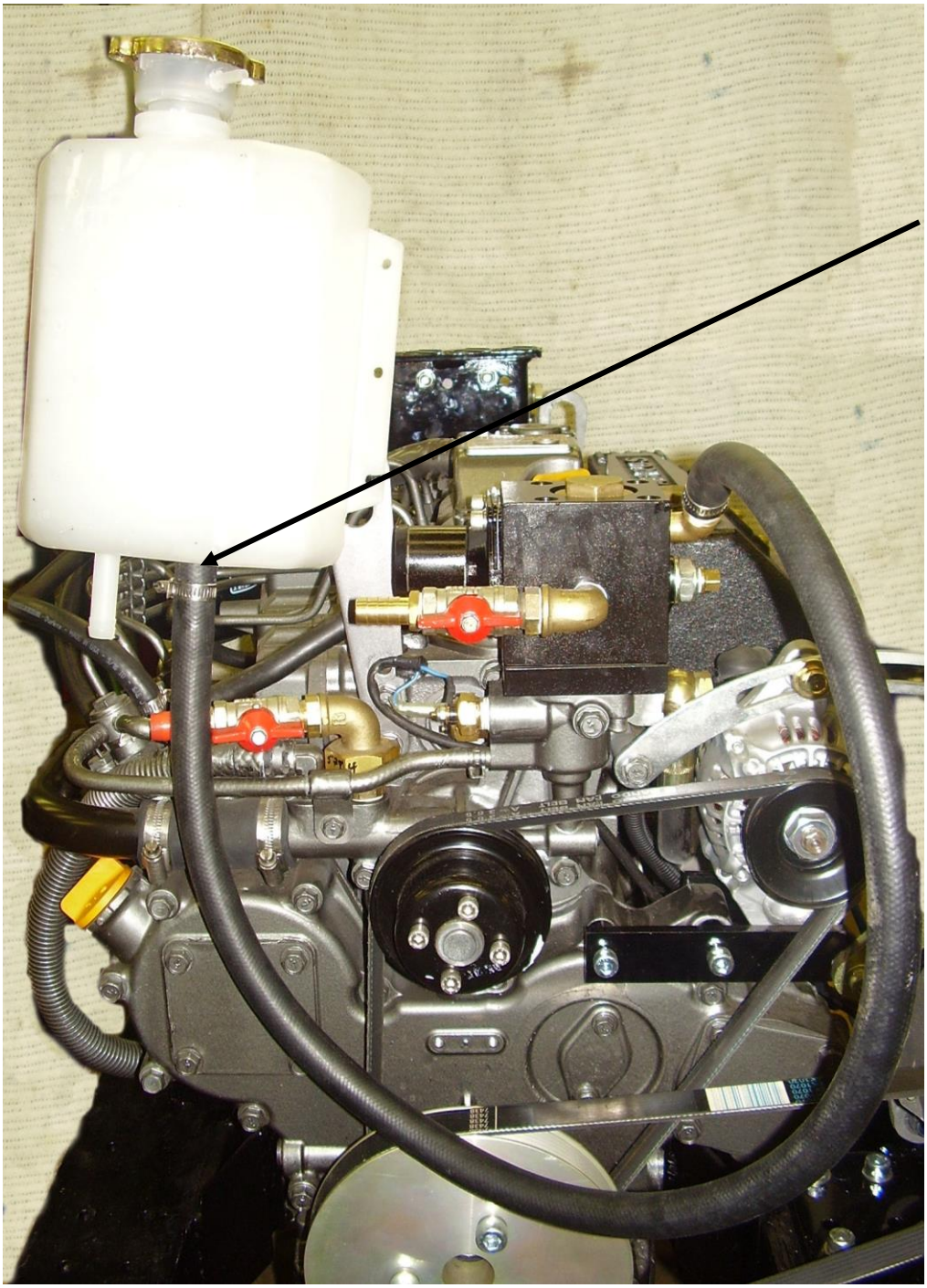

Figure 3-5: Shire 50 Header Tank Connections

7. Shaft Connection and Propeller Selection

- Some type of flexible coupling must be used to connect the gearbox output flange to the propeller shaft flange.
- Please note, underperforming engines will not be covered under warranty if the cause of the poor performance is found to be the use of an inappropriate propeller.

8. Engine Anti-Vibration Mounts

- Ensure that the engine feet do not end up at the top of the thread on the engine mounts, this puts undue pressure on them and can result in excessive engine movement and premature mount failure. If this is a problem put steel packing plates under the mounts. Packing plates 25mm thick are available: order RDG3906 Engine mount spacer. Alternatively they can be manufactured locally.
- Ensure that the engine has been installed for at least 24 hours before shaft alignment is checked, to allow the mounts time to settle under the engine weight.

- Ensure that the anti-vibration mount centre screw is sufficiently raised so as not to touch the engine bed. If this occurs, excessive engine vibration will be experienced through the hull.
- For best results, fit the front AV mounts into the front holes in the engine rails. If engine room space is a problem the mounts can be fitted slightly further back in the alterative holes, and the front of the rail cut off – leaving 50mm of material to retain strength (measuring from the centre of the mount hole to the front end of the rail). Note: this procedure is only possible on non VDO travelpower engines, and may result in a very slight increase in vibration.

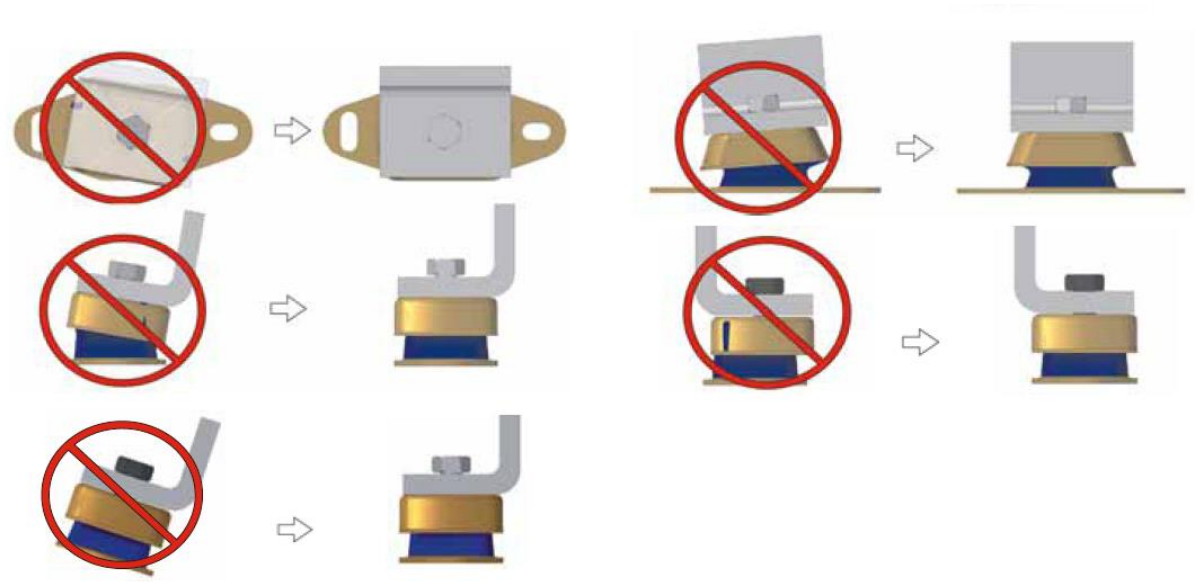

Figure 3-6: Correct Anti-Vibration Mount Installation

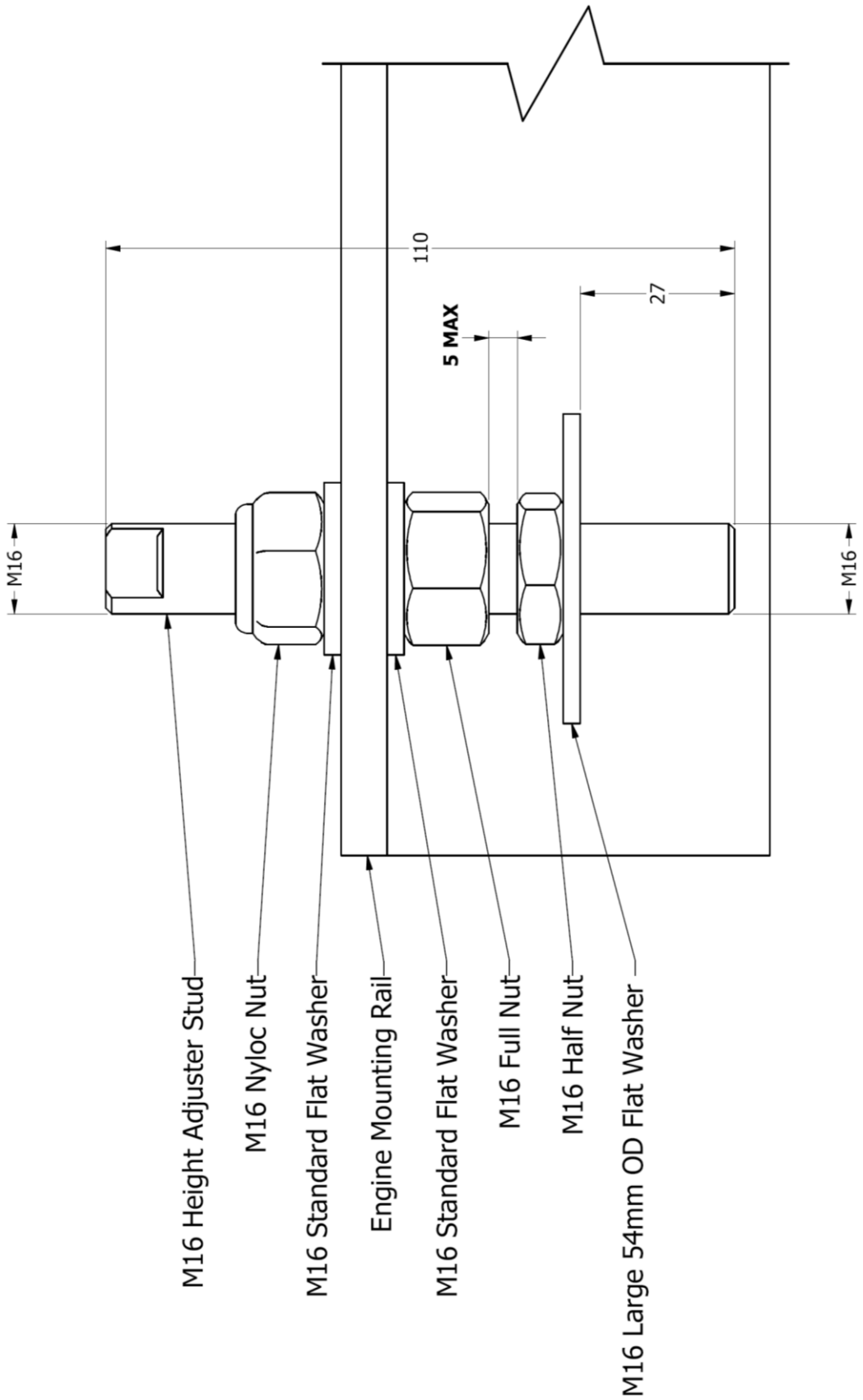

Figure 3-7: Correct Anti-Vibration Mount Installation

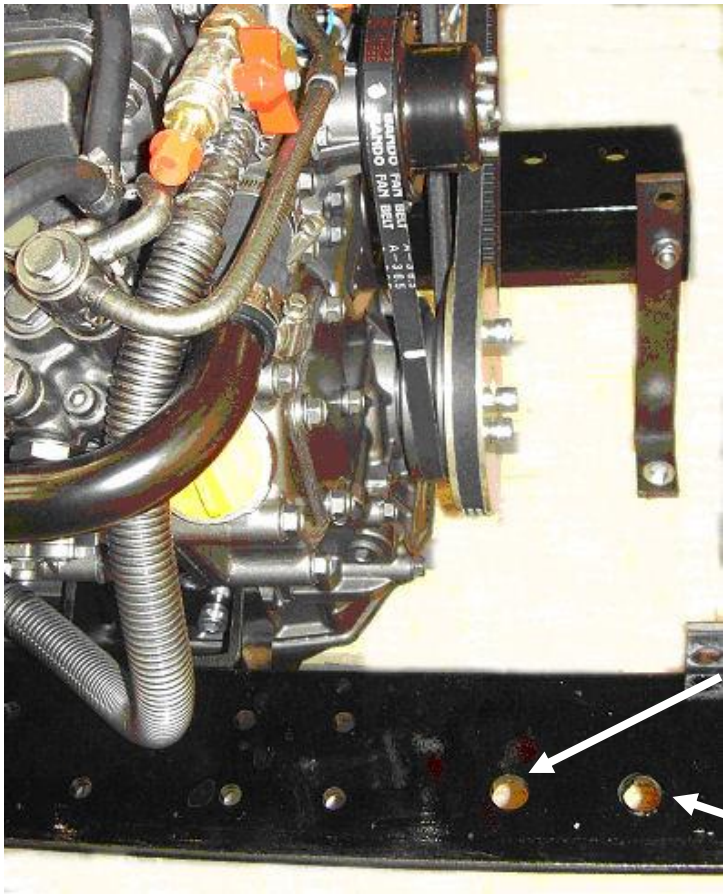

Figure 3-8: Anti-Vibration Mount Installation Points

9. Engine Alignment

- The gearbox output shaft flange and propeller shaft input flange must be almost perfectly aligned. A maximum of 0.05mm (.002") misalignment in any plane is acceptable. Ensure alignment is rechecked after the first 4 hours of running, after the first month, and thereafter annually.
- If the engine is out of alignment it will result in excessive vibration and possible damage to the stern tube and propeller shaft.
- Boats that are fitted with fully flexible drive couplings should still have the engine and shaft alignment as close as possible. A dummy shaft may be required for this purpose. (Note: some types of flexible shaft couplings require the input and output to be misaligned, check with the coupling manufacturer's installation instructions).
- Minimum clearance of 25mm between rails and bulkhead (forward).
- Minimum clearance of 25mm between rails and engine beds

10. Electrics

- Do not attach any part, hose or cable to the engine wiring harness. There is a warning label attached to the harness to remind you of this.
- Connect the wiring extension harness multi plug to the panel plug, and the other end to the engine.
- Connect the start battery positive cable to the engine starter motor solenoid terminal.
- The starter motor battery cable must have a cross sectional area of at least 50mm2.
- For twin alternator engines, connect the domestic battery positive cable to the 140A or 240A alternator. The 140A alternator has a B+ terminal and the 240A alternator has a “pos out” terminal (see wiring diagram). This ensures that the 50A alternator charges the start battery and the 140A or 240A alternator charges the domestic battery, removing the requirement for a split charging system or relay.
- The engine is supplied with the domestic alternator belt not fitted. This is so that domestic alternator damage does not occur if the engine is run without the domestic battery back connected. The belt should only be fitted when domestic battery bank has been connected to the domestic alternator. Belt fitting and tensioning instructions are in section **5**, Servicing Procedure (ensure alignment is correct).
- A cable will need to be manufactured locally and fitted between the lower 140A or 240A alternator and domestic battery positive terminal. Cable should have a minimum cross sectional area of $40mm^2$ for Shire 30, 35, 38 and 40. $70mm^2$ for Shire 45 and 50.
- Both negative battery terminals can be connected to a common earth point.
- Note: The 240A alternator is of the insulated earth design and requires a heavy duty earthing wire installed at all times.

11. Electrical Options

- If the engine is fitted with the optional 230V Travel Power System, refer to the manual supplied with it for correct wiring, control box installation and operation.
- The Shire range can be supplied with an optional additional 12v or 24v alternator. This will be supplied fitted but not wired. It is the responsibility of the boat builder to ensure that this is correctly wired to the boats electrical system.

12. Engine Oil

- All Shire engines are supplied fully run in.
- Check oil levels in engine and gearbox before starting.
- Use a good quality engine oil SAE 15W/ 40 API class CD.

WARNING:

ENGINE OIL WITH A HIGHER API CLASS THAN CD IS UNSUITABLE FOR CANAL BOAT OPERATION AND WILL CAUSE ENGINE DAMAGE IF USED.

13. Fuel

- Ensure the main fuel tank is clear of dirt & water.
- A separate water trap is strongly advised (the Shire 30, 35, 40, 45 and 50 engine are supplied with a fuel pre-filter water trap as standard).
- Shire 38 must have a separate water trap fitted.
- Connect fuel feed and return hoses from engine to main supply and return lines to main fuel tank, ensuring they are connected the correct way around. The hose to the fuel pump is the inlet.
- The engine hoses are supplied with 5/16" (8mm) OD metal hose tails and should be securely fitted to the main supply and return pipes with compression fittings.
- The engine hoses should have sufficient slack to absorb engine movement without placing strain on the hoses and be securely clipped to prevent accidental damage and chafing.
- Initially fill the fuel system by turning the ignition on to operate the electric fuel pump. Loosen the bleed screw on the top of the primary fuel filter/water trap and close when fuel begins to flow clearly (no bubbles). It is rarely necessary to bleed the injection pump or injectors upon installation as the engine will already have fuel in it from the engine run in and test procedure.

14. Coolant

- Prepare coolant mix of 50% clean tap water and 50% antifreeze.
- Open the calorifier taps (if fitted) to fill the calorifier system and displace air.
- To fill the cooling system for the first time, fill the boat skin tank via the inlet hose connection or filler plug if fitted.
- Shire 30, 35, 38, 40: Fill the engine through the white plastic expansion tank.
- Shire 45: Fill the engine through the twin thermostat housing filler, then top up the white plastic expansion tank.
- Shire 50: Fill the engine through the water-cooled exhaust manifold filler, then through the twin thermostat housing. Top up though the white, plastic expansion tank.
- N.B. After running the engine for the first time, monitor the water level frequently as trapped air bubbles may be expelled. Top up the system as necessary.
- Bleed skin tank

15. Calorifier

- The temperature of coolant flowing to the calorifier from the engine can be between 85 and 90°C. A blender valve must be incorporated in the calorifier/hot water system outlet to lower the hot water temperature for domestic use.

16. Control Cables

- Connect engine speed control cable. With the engine off, ensure that the engine speed control lever achieves full travel from idle to full speed. Adjust if necessary.
- Check the gearbox shift lever selects positively and that the drive direction corresponds with the gearshift control lever. Ensure that the gearbox control lever and the gearshift lever are both in neutral before connection. Adjust if necessary.

17. Domestic Battery Bank

Domestic battery banks that are too large create excessive loads on the domestic alternator. Alternators running at maximum output for prolonged periods of time will eventually fail prematurely; alternators that fail due to the battery bank being over the maximum recommended size will not be covered by warranty.
Higher output additional alternators, or travel power kits are available; if larger battery banks are required discuss your individual power requirements with the boat builder.

- The maximum domestic battery bank is calculated using the following:

Live aboard, three times domestic alternator, maximum output current.

Weekend cruising or hire fleet use, three and a half times domestic alternator, maximum output current.

Example 1:

Live aboard application fitted with a 140 amp domestic alternator

3 x 140 = 420 ampere/hour maximum battery bank size

Example 2:

Weekend cruising or hire fleet application fitted with a 240 amp domestic alternator

3.5 x 240 = 840 ampere/hour maximum battery bank size

18. Control Panel

All Shire engines are supplied with high quality engine control panel that all show RPM and hours run and include warning lights and a warning buzzer, the deluxe panels also have in addition gauges for water temp, oil pressure and battery charging. The panels are designed to be splash proof and are correctly installed with the gauges vertical. Do not install so that they remain out in the open, or cover up when not in use.

The control panel engine tachometer is supplied already calibrated to measure correct engine speed, if a new dash panel, tachometer or alternative alternator is fitted the tacho will require re-calibrating.

Dash Panel Calibration Procedure:

- Connect dash panel plug to engine wiring loom plug
- Turn ignition on (do not start engine)
- Press and hold black button on rear of tacho until “H –“ appears on the digital display on the bottom of the tacho (on the front).
- When pressing and holding the black button on rear of tacho, the value displayed will

increase/decrease until button is released. Then when pressed again it will increase/decrease in the other direction, keep doing this until the digitally displayed value on bottom of tacho reaches the correct value, according to the type of alternator (see table). Must be set to the alternator with blue and black wire connected to it.

- Confirm settings to tacho meter reader.
- An optical tachometer is required to check the reading.

Barrus Alternator (Amps)	Barrus tacho reading
50	10.50 - 11.00
70	15.00
110	18.00
140	19.50 - 20.00
240	22.00

Alternative or non-standard alternators will require calibrating and checking by trail and error with a hand held tacho until the engine speed and indicated tachometer speed are the same.

Engine energise to stop systems are available as an optional extra.

19. Exhaust System

The exhaust outlet size on the engine is 1 $^{1}/_{2}$" BSP female. There must be a flexible exhaust hose of suitable exhaust grade between the engine and the silencer or hull outlet. The outlet must be above the waterline at all times.

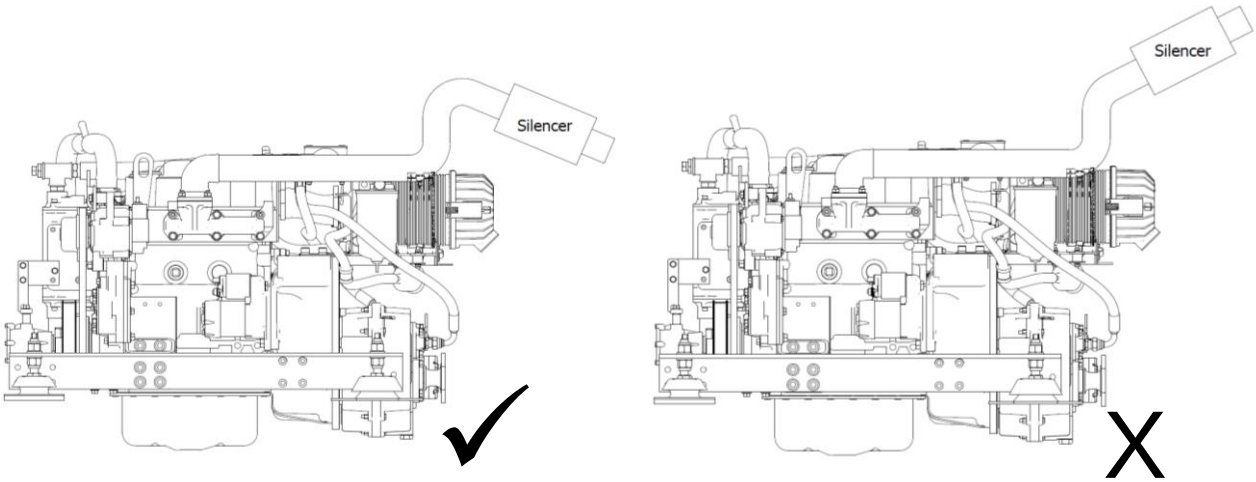

- Make sure exhaust increases then decreases in height as shown above

20. Hydraulic Drive Transmissions

If an engine is to have a **Hydraulic Drive Transmission** attached to it, a number of points

must be observed.
Bobtail engines (i.e. Engines supplied without a marine gearbox), normally **do not** have a gearbox oil cooler fitted, however if a cooler is supplied, this will only be suitable to cool a conventional marine gearbox.
Hydraulic drive transmissions generate far more heat than a conventional marine gearbox, therefore the size of oil cooler installed must be calculated by the hydraulic drive transmission supplier; to ensure it has sufficient cooling capacity, and is sized appropriately taking into account:

- Maximum engine power
- High ambient summer air temperature
- Summer River/Canal/Sea temperature
- No additional restriction to engine coolant flow is present

Skin tanks will also need to be increased by approx. 10% dissipate the additional heat generated.

21. Hydraulic Pump Drive Option (Shire 38 / 40 / 45 / 50)

For SAE type pump (9T).

If a hydraulic pump is required to drive items such as bow thrusters or hydraulic winches then the following parts are required to enable drive to be taken from the engine power take off.

Part No. 129484-26200 incorporates:

- Packing (on gear case side): 171353-26081
- Cover: 121023 - 26070
- Cover packing: 121023-26061

Ratio: 0.903:1

22. Installation Check list

Engine alignment correct, clearance all round, check propeller turns by hand (Ensure ignition is off battery and battery master switch is off)	
Anti-Vibration mounts correct height, spacers if necessary	
Exhaust system as specified	
Battery leads are of correct size, tightened and start battery is charged	
Check tension of alternator belts, wiring connected and belt alignment checked If removed	
Check fuel system is connected correctly and primed	
Fuel line water trap installed and water drained off	
Check header tank and skin tank connections are correct way round, constant pipework rise to header tank	
Check level of coolant in header tank and correct ratio	
All air has been bled from skin tank, calorifier and pipework	
Engine and gearbox oil levels are as specified	
Throttle and gear cables correctly adjusted and operating smoothly	
All pipework and cabling supported and not chaffing, slack to allow movement of engine	
Confirm panel and warning lights operational	
Check for leaks	
Explain/Demonstrate off season storage and maintenance	
Installer's signature	
Installer name/company	

SECTION 4 - Operation

1. Starting the Engine for the First Time

- Remove ignition key.
- Ensure all oil and coolant levels are checked.
- Ensure both engine and domestic batteries are connected. Battery master switches must be turned on.
- Check all connections and mountings are tight.

2. Starting Procedure

Note: Shire engines **do not** have a cold start function as standard. Therefore the glow plug light will not illuminate.

- Ensure the gearshift control lever is set to neutral, and that persons are clear of any moving parts.
- Insert the ignition key.
- Ensure the domestic battery isolator is turned to the on position **before** starting the engine, failure to do so may damage the domestic alternator.
- Turn key to first position, on.
- Observe warning lights (and gauges on deluxe panel). N.B. the engine overheat light will only illuminate when the water temperature exceeds the safe level
- Listen for warning buzzer.
- Turn key to second position, start, and hold to crank.
- Crank the engine for no more than 15 seconds.
- On engine start, immediately release key.
- Key will return to first position, on.
- The warning buzzer will stop and on the deluxe panel the oil pressure gauge will show an oil pressure of 3.5 – 4.5 bar [51-65 psi].
- Should any warning light not go out, or if there is no reading on the oil pressure gauge, the buzzer will continue sounding. In this case, stop the engine immediately and check the relevant system (Note: if the charge light does not go out, briefly increase the engine speed).
- Stop engine immediately if any abnormal noises are detected.
- Visually check the engine for oil, fuel and coolant leaks, (after initial start up and at regular intervals, N.B. engine must be stopped to carry out this check).

3. Stopping Procedure

- Move speed control lever to idle position.
- Turn key to off position.

4. Full Load Running

- Running diesel engines near their rated output (maximum load) regularly will disperse accumulated carbon and condensation enhancing engine life and reducing emissions.
- Running the engine at, or near, maximum speed whilst in gear may not be possible on inland waterways with speed limits in place. This will have to be carried out whilst moored up. Ensure that the mooring ropes and posts are strong enough to allow this, and that the water is deep enough not to damage the propeller. It is recommended that the engine is run at or near full load for 15 minutes (maximum revs, in gear) every 50 hours.

5. Refuelling

- All Shire canal boat engines run on Diesel fuel.
- Please note that when the vessel is to be left for any period of time the fuel tank should be left full to eliminate the build up of condensation and formation of water in the fuel tank.
- Engine to be turned off while refuelling.
- The fuel type for all Shire canal boat engines is diesel. **DO <u>NOT</u> USE BIODIESEL.**

6. Twin Thermostats – Shire 45 and 50

The twin thermostat design is a feature unique to the Shire canal boat, engine range. It ensures that the engine warms up very quickly due to the first thermostat being closed so that cooling water is routed through the specially designed cast iron exhaust manifold (Shire 50 only). The waste heat from the exhaust is recycled to bring the engine up to operating temperature even quicker than normal. This ensures efficient engine operation with reduced fuel consumption and even cleaner exhaust emissions. It also helps in keeping engine wear to a minimum.

The diagrams on the following page show the operation of the cooling system.

Note: Shire 30, 35, 38 and 40 have a single thermostat only.

With the engine quickly up to operating temperature, the first 71° thermostat opens. The water now flows to the domestic hot water tank, resulting in hot water being rapidly available.	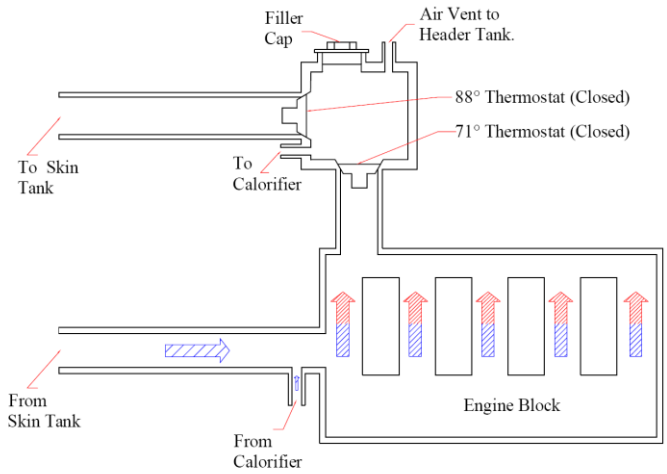
When the water stored in the hot water tank has reached full temperature, the second 88° thermostat opens and water can then flow to the skin tank and correctly control engine cooling. The exhaust manifold that earlier helped to heat engine water is now cooled to ensure safe operation and reduce engine compartment temperatures.	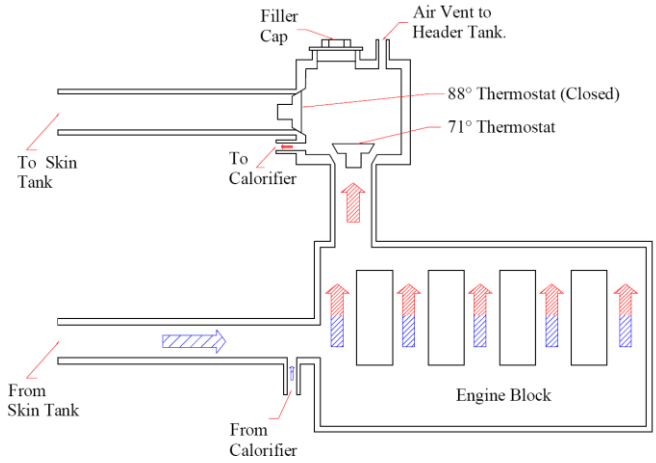
If the load on the engine reduces and the demand for domestic hot water increases then the system will automatically compensate and re-direct water to ensure that a plentiful supply of hot water is always available.	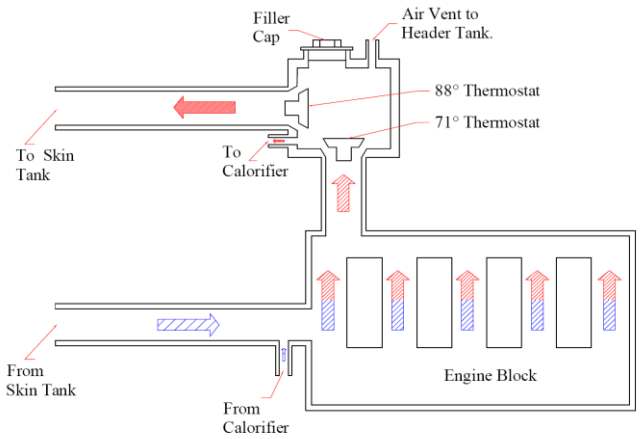

Figure 4-1: Twin Thermostat Operation

Diesel Fuel Additive

The use of diesel fuel additive is strongly recommended on Shanks & Shire engines. The quality of the fuel available when cruising is often unknown; also the fuel may have been in storage for long periods of time. The use of additives will ensure that your engine fuel injection system is in top condition which should result in many years of smooth reliable operation without the cost and inconvenience of expensive breakdowns due to poor quality fuel. It has also been found that improvements in fuel consumption and start ability are an added benefit of using this product.

Diesel fuel additive is available from your Shanks or Shire dealer in a handy 375ml container, part number RDG80210219.

7. Exhaust Back Pressure

The back pressure falls within the manufacturers recommended range when using the exhaust system supplied with the engine.

SECTION 5 - Service Procedure

1. Engine Oil and Filter Change

CAUTION:

WEAR DISPOSABLE GLOVES AND BEWARE OF HOT OIL AND ENGINE BLOCK.
REMOVE THE IGNITION KEY BEFORE WORKING IN ENGINE COMPARTMENT.

- Change the engine oil while the engine is still hot.
- Remove the blanking plug in the sump pump spout. [6mm Allen key] Note: Shire 50 has two oil drain pumps, it is the pump mounted up higher on the engine.
- Place a plastic tube over the spout and into a container. Operate the pump handle to empty the sump. (Remember to refit the blanking plug afterwards).
- Place a drip tray under the engine to catch the small amount of oil that will escape from the oil filter. Using the strap type oil filter removal tool (supplied), slacken the filter from the engine block in an anti clockwise direction, remove the tool and spin off the filter.

- Lightly oil the new filter O ring seal and install the filter onto the engine. Spin it on in a clockwise direction and finally tighten by hand only as firmly as you can.
- Refill the sump using the yellow oil filler cap in the rocker cover on top of the engine.
- Oil level should be to the top mark on the dipstick.
- Run the engine for 5 minutes to fully circulate the oil, and check for leaks, stop the engine. Wait 5 minutes before checking the oil level with the dipstick and top up if required.
- Do not exceed maximum oil level marker as this may cause damage to the internal components of the engine.

2. Air Filter Check & Change

CAUTION:

WEAR DISPOSABLE GLOVES AND BEWARE OF HOT OIL AND ENGINE BLOCK.
REMOVE THE IGNITION KEY BEFORE WORKING IN ENGINE COMPARTMENT.

- Release the two spring clips, pull off the end cover to reveal the filter element. The element simply pulls out.
- To fit the new element, slide the open end of the filter element into the main body; gently push the element until fully seated. Refit the end cover.
- The air filter element is constructed from pleated paper; inspect it closely for dust or dirt. The air filter cannot be cleaned and must be replaced when dirty. The engine requires clean unrestricted air to run efficiently, failure to maintain the air filter could result in smoke, increased fuel consumption and ultimately engine damage.

3. Gearbox Oil Change

CAUTION:

WEAR DISPOSABLE GLOVES AND BEWARE OF HOT OIL AND ENGINE BLOCK.
REMOVE THE IGNITION KEY BEFORE WORKING IN ENGINE COMPARTMENT.

NOTE: Some engines will have a gearbox sump pump fitted, to change the oil in this circumstance, follow the same procedure as was outlined for changing the engine oil. For

engines without a gearbox sump pump, follow the procedure below.

- Change the gearbox oil while it is still hot (Please refer to gearbox manual for more information).
- Place a tray beneath the gearbox that will hold at least 2.0 litres.
- Remove drain plug and allow 5 minutes for oil to drain thoroughly.
- Replace the drain plug, ensure that the sealing washer (if used) is still in place, and in good condition, tighten. Fit a new washer if required.
- Refill the gearbox with oil to the upper mark on the dipstick. Screw dipstick in fully to establish level. Refer to PRM Owner manual for more details. Section 6 contains details of oil specifications.
- Do not overfill gearbox as this can damage the internal components.

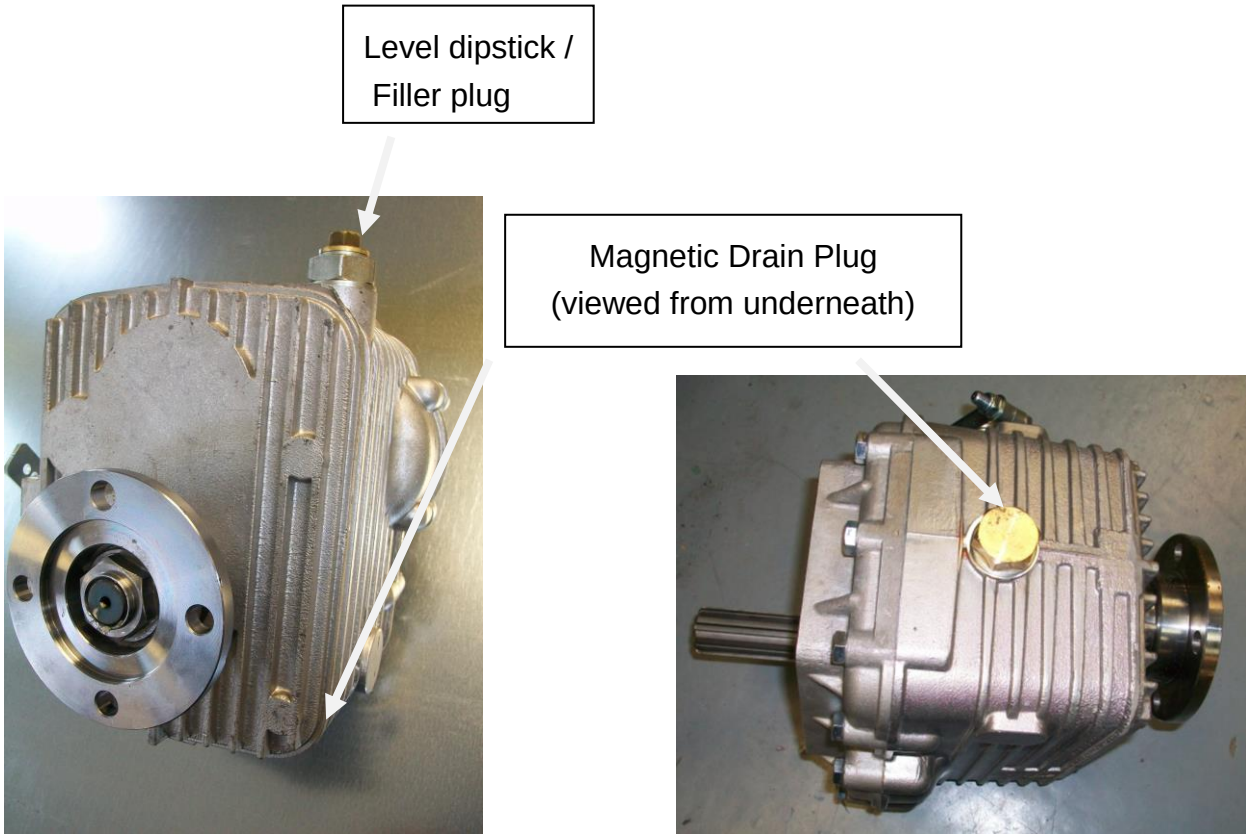

Figure 5-2: PRM 80 and 120 Gearbox

Figure 5-3: PRM150 Gearbox

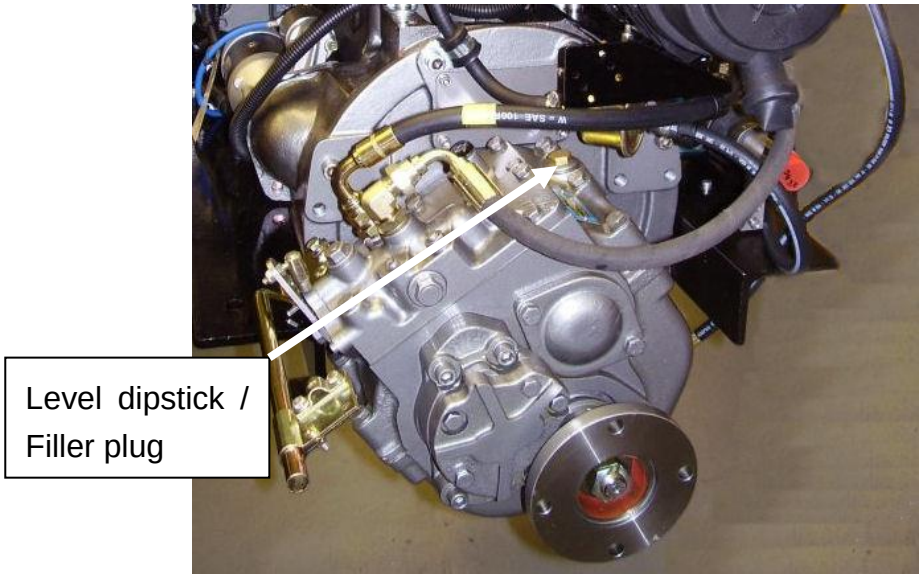

Figure 5-4: PRM260 Gearbox

4. Disposal of Oil and Related Items

- Please dispose of used oil and oil filters safely with due regard for the environment and take to your local waste oil disposal point.
- Do not allow oil or contaminated parts to enter the inland water way system.

5. Primary Fuel Filter Water Drain – Shire 30, 35, 40, 45 & 50

CAUTION:

WEAR DISPOSABLE GLOVES.

REMOVE THE IGNITION KEY BEFORE WORKING IN ENGINE COMPARTMENT.

Note - Shire 38 is not fitted with a primary fuel filter/water trap.

- Place a small drain bowl under the primary fuel filter/water trap.
- Loosen the drain screw located in the bottom of the fuel filter/water trap (Figure 5-6).
- Drain off any water.
- Once the water has been drained - re-tighten the drain screw.
- It is unlikely the complete fuel system will require bleeding.
- Run for 5 minutes.
- Check that the drain union is tight and that there are no leaks.
- Note: the boat builder should have fitted an additional water trap in the fuel system before the engine. Ensure that this is drained regularly.
- Do not over tighten drain screw.

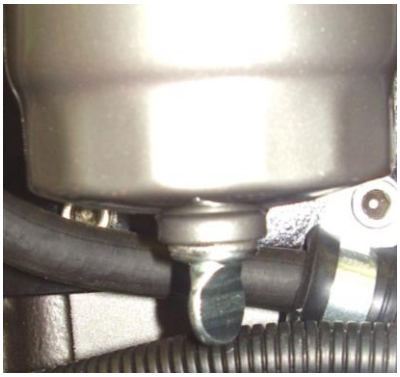

Figure 5-6: Primary Fuel Filter Drain Screw

6. Primary and Secondary Fuel Filter Change

CAUTION:

WEAR DISPOSABLE GLOVES.

REMOVE THE IGNITION KEY BEFORE WORKING IN ENGINE COMPARTMENT.

- Ensure the fuel tank is at least ¾ full prior to undertaking this procedure.
- Turn off the main boat fuel supply tap, located on or near the fuel tank.
- Place a small drip tray under the filter body.
- Remove the fuel filters using the filter wrench supplied. Unscrew them until loose then remove by hand.
- Primary fuel filter only – Retain the metal fuel filter drain screw from old filter and re-use in the new filter. (Shire 30, 35, 40, 45 and 50 only)

- Smear a small amount of clean fuel on all of the **O** ring seals that are supplied with the new filter element.
- Screw the new element back into the filter head. Tighten by hand only.
- Turn the main boat fuel supply tap back on.
- Ensure system is correctly bled before attempting start up.

The same procedure is used for both Primary and secondary fuel filter changes

7. Fuel System Bleeding

- Ensure the fuel tank is at least ¾ full prior to undertaking this procedure.
- See Fuel paragraph, Section 3, in Yanmar Engine Operation Manual.

8. Cooling System

WARNING:

DO NOT CHECK THE COOLANT LEVEL WHEN THE ENGINE IS HOT. REMOVE THE IGNITION KEY BEFORE WORKING IN ENGINE COMPARTMENT.

- To check the coolant level, ensure that the engine has been shut down for at least half an hour.
- The coolant level can be checked visually and should between the two level marks formed on the front of the white, plastic expansion tank.
- If required, top up the level with coolant (50% clean tap water and 50% ethylene glycol based anti-freeze) through the expansion tank filler cap.
- Do not use water only to top up as this weakens the coolant mix, reducing the level of frost protection and anti-corrosion protection of the coolant.

9. Belt Adjustment

CAUTION:

REMOVE THE IGNITION KEY BEFORE WORKING IN THE ENGINE COMPARTMENT.

- Depress the longest run of the drive belt to be checked. If the travel exceeds 15 -20mm using hard finger pressure, the belt needs re-tensioning.
- Loosen the upper adjuster bolts on the alternator, and the lower mounting pivot nut and bolt, either pull out using hand pressure or use the tensioning screw, depending on which alternator belt is to be tensioned.
- Pull the alternator away from the engine to tighten the belt.
- Hold the alternator in position and re-tighten all the bolts.
- Note: if the belts are over tightened alternator bearing failure will occur.

10. Belt Maintenance

- Do not allow oil to contact the belt. Oil attacks the construction of the belt, reduces the drive efficiency and will ultimately cause it to fail prematurely.
- Replace the belt if it cracks or splits and as the adjustment nears the limit of its travel.
- Note: Some boat builders may remove one or more of the alternators during the installation of the engine. It is essential that when the alternators are re-fitted that the alignment is perfect or premature belt wear will occur.

11. Belt Replacement

CAUTION:

REMOVE THE IGNITION KEY BEFORE WORKING IN THE ENGINE COMPARTMENT.

- Ensure that you have the correct replacement belts before starting this procedure. (Some engines may have been fitted with non-standard optional alternators which may not use the belt sizes listed. Make a note of these belt sizes up on delivery).

- Loosen the top adjuster bolts, and the lower mounting pivot nut and bolt.
- Push the alternator towards the engine to loosen the belt.
- Remove the belt.
- Hold the belt in position over the top alternator pulley; rotate the engine if required, by hand, to guide the new belt into the “vee”.
- Re-tension the belt as above.

12. Dash Panel Maintenance

CAUTION:

REMOVE THE IGNITION KEY BEFORE WORKING IN ENGINE COMPARTMENT.
TURN BATTERY ISOLATION SWITCHES OFF.

Warning Light Bulb replacement

1. Release the panel from its mounting
2. To replace an illumination bulb.
    a. The bulbs are accessible from the rear of the panel. Remove the wires, unscrew the nut and pull out the bulb housing from the panel.
3. To replace any gauge
    a. The gauges are accessible from rear of the panel. Unplug the wire connectors, unscrew and pull the gauge out from the panel.
4. Periodically squirt a lubricant in to the key switch slot with key removed (a lubricant such as WD40 – with silicon, other lubricants are available). Then with the battery master switch turned off operate key switch a couple of times to ensure lubricant works in to mechanism.

SECTION 6 - Service Schedule

Specifications and Capacities

ENGINE OIL CAPACITY (WITH FILTER):

Engine	Capacity (litres)	Capacity (Pints)
30, 35	5.5	9.6
38, 40, 45, 50	7.4	13

GEARBOX OIL CAPACITY (EXCLUDING COOLER):

Gearbox	Capacity (Litres)	Capacity (Pints)
PRM 80	0.57	1.0
PRM 120	0.8	1.4
PRM 150	1.4	2.5
PRM 260	1.5	2.7

Engine Oil: SAE 15W 40 API Class CD.

Coolant: 50% Clean Water + 50% Ethylene Glycol Antifreeze.

PRM 80 and 120 Gearbox: ATF (Automatic Transmission Fluid) oil.

PRM 150 and 260 Gearbox: Engine Oil.

Service Intervals

	Check	Change	Notes
Engine Oil & Filter	Daily (level)	Every 250 hours Or 12 Months *	First change after 50 hrs
Gearbox Oil	Weekly (level)	Every 250 hours Or 12 Months *	First change after 25 hrs
Coolant level	Daily (level)	Every 24 Months	
Diesel Fuel Filter Primary and Secondary	50 hours	Every 500 hours Or 12 Months *	Drain water every 50 hours, or monthly #
Air Filter Element	250 Hours	Every 500 hours Or 24 Months *	Sooner if required
Drive belts	Daily	As required	Adjust as necessary
Key Switch	Lubricate	Every 150 hours Or 12 Months *	As per Instructions section 12, Dash Panel Maintenance

* Whichever occurs first.

If large quantities of water are found in fuel when filter drained, increase frequency of draining

SECTION 7- Wiring Diagrams

1. Engine Wiring Diagram Shire 30, 35, 38 & 40

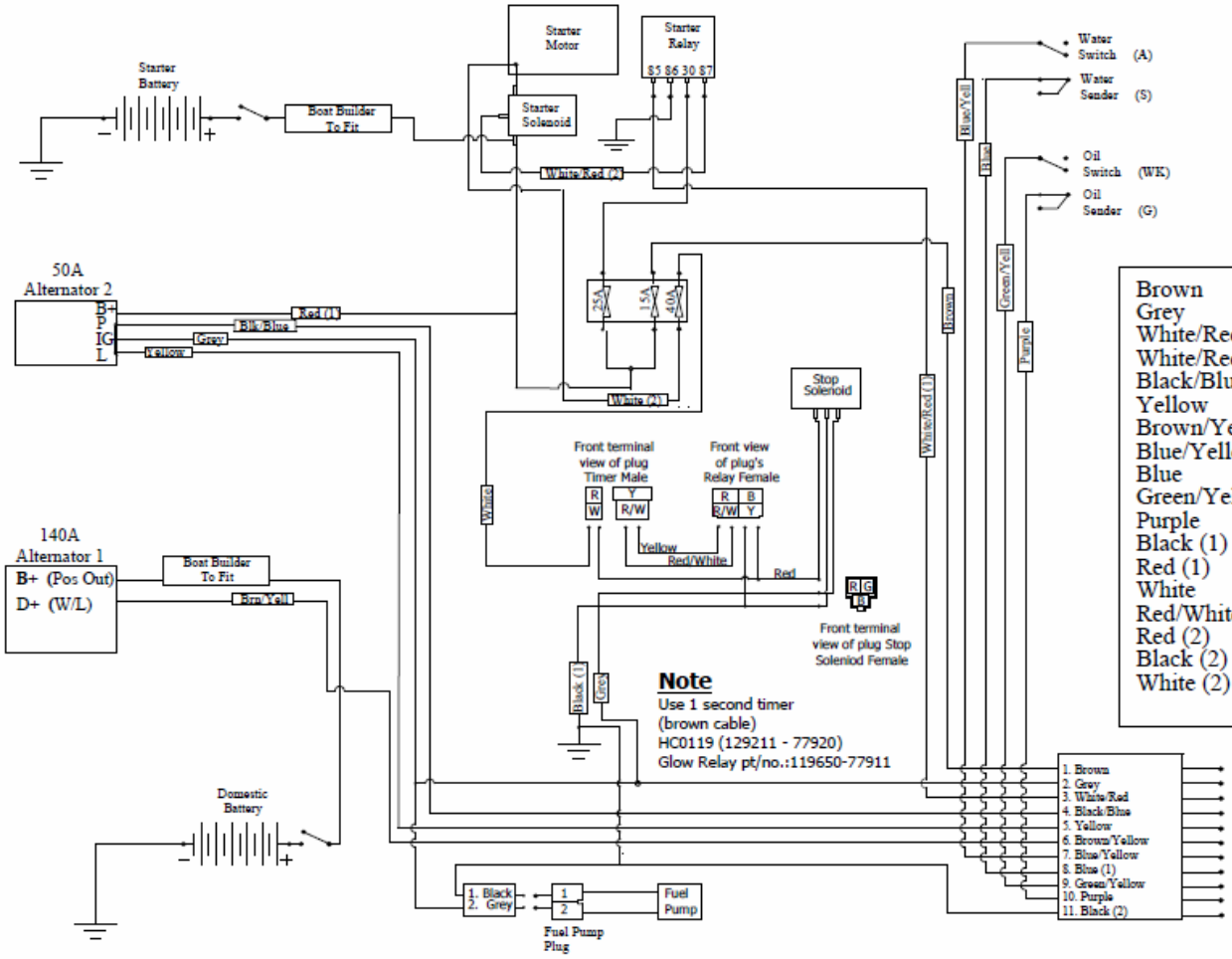

Shire Canal Boat Engine

Wiring Diagram
14 30, 35, 38 & 40

12 Volt

Schematic Only
© E.P. Barrus Ltd

RDG205A9
Issue 1

Conductor Sizes

Brown	Dash Panel live	14A	No. 1- 11 Pin connector
Grey	Ignition on	5A	No. 2- 11 Pin connector
White/Red (1)	Trigger to starter sol.	14A	No. 3- 11 Pin connector
White/Red (2)	Live to Start Sol.	14A	
Black/Blue	Tacho wire	5A	No. 4- 11 Pin connector
Yellow	Charge W/L 50A alt	5A	No. 5- 11 Pin connector
Brown/Yellow	Charge W/L 110A alt	5A	No. 6- 11 Pin connector
Blue/Yellow	Water switch	5A	No. 7- 11 Pin connector
Blue	Water sender	5A	No. 8- 11 Pin connector
Green/Yellow	Oil switch	5A	No. 9- 11 Pin connector
Purple	Oil sender	5A	No. 10- 11 Pin connector
Black (1)	Earth	14A	No. 11- 11 Pin connector
Red (1)	50A alt live	55A	
White	Stop sol. pull in	25A	
Red/White	7kw Live	14A	
Red (2)	Fuse Feeds	14A	
Black (2)	Earth	14A	
White (2)	Stop sol. pull in trig	5A	

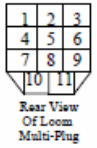

Fuses

Engine start control system	25amp (RDG1152)
Engine stop control system	40amp (RDG3246)
Dash panel supply	15amp (RDG3245)

2. Engine Wiring Diagram Shire 30 & 35 (with Glowplugs)

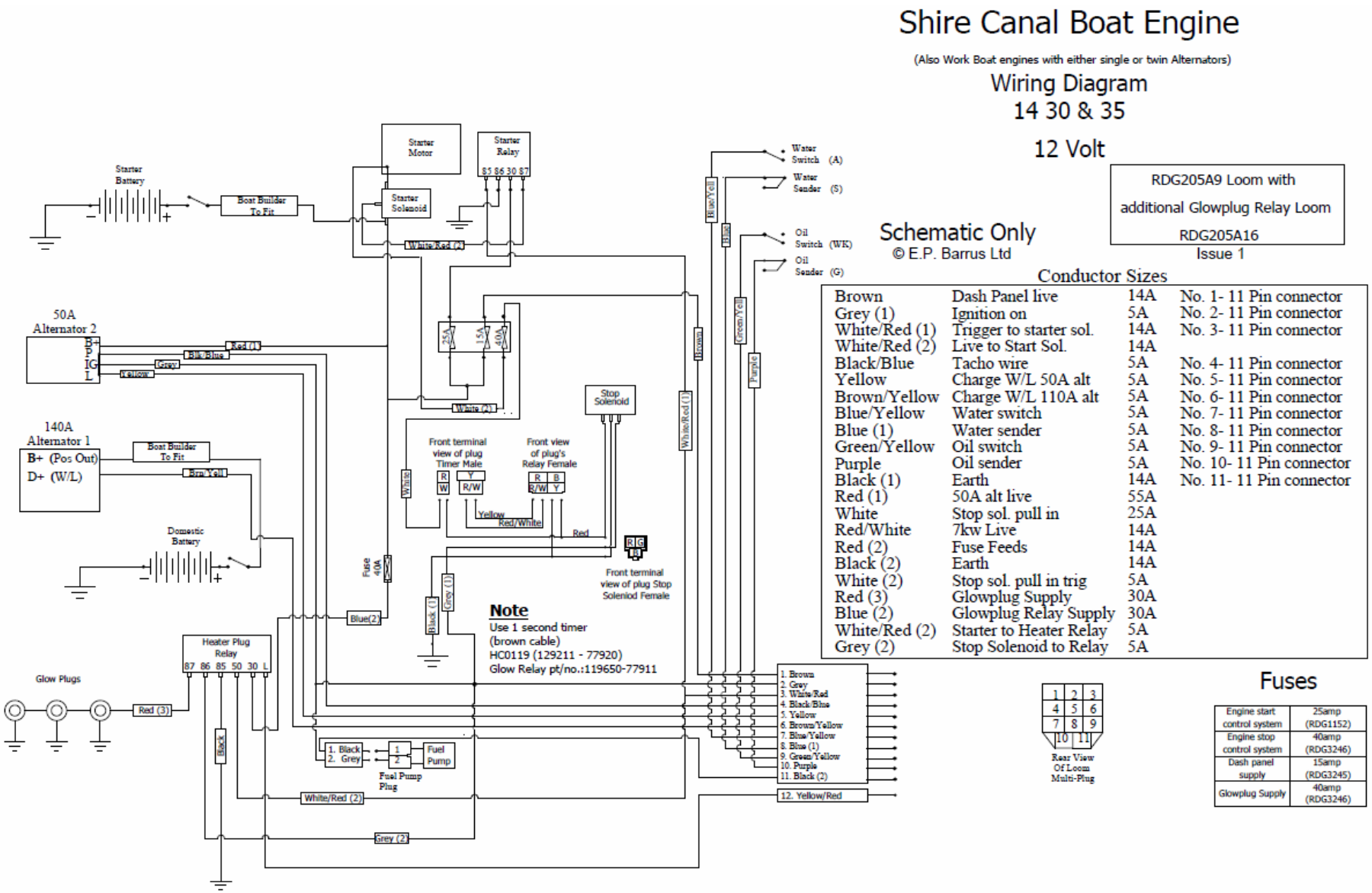

3. Engine Wiring Diagram Shire 45, 50 & 70 (Shire 40 with optional 240A Alt)

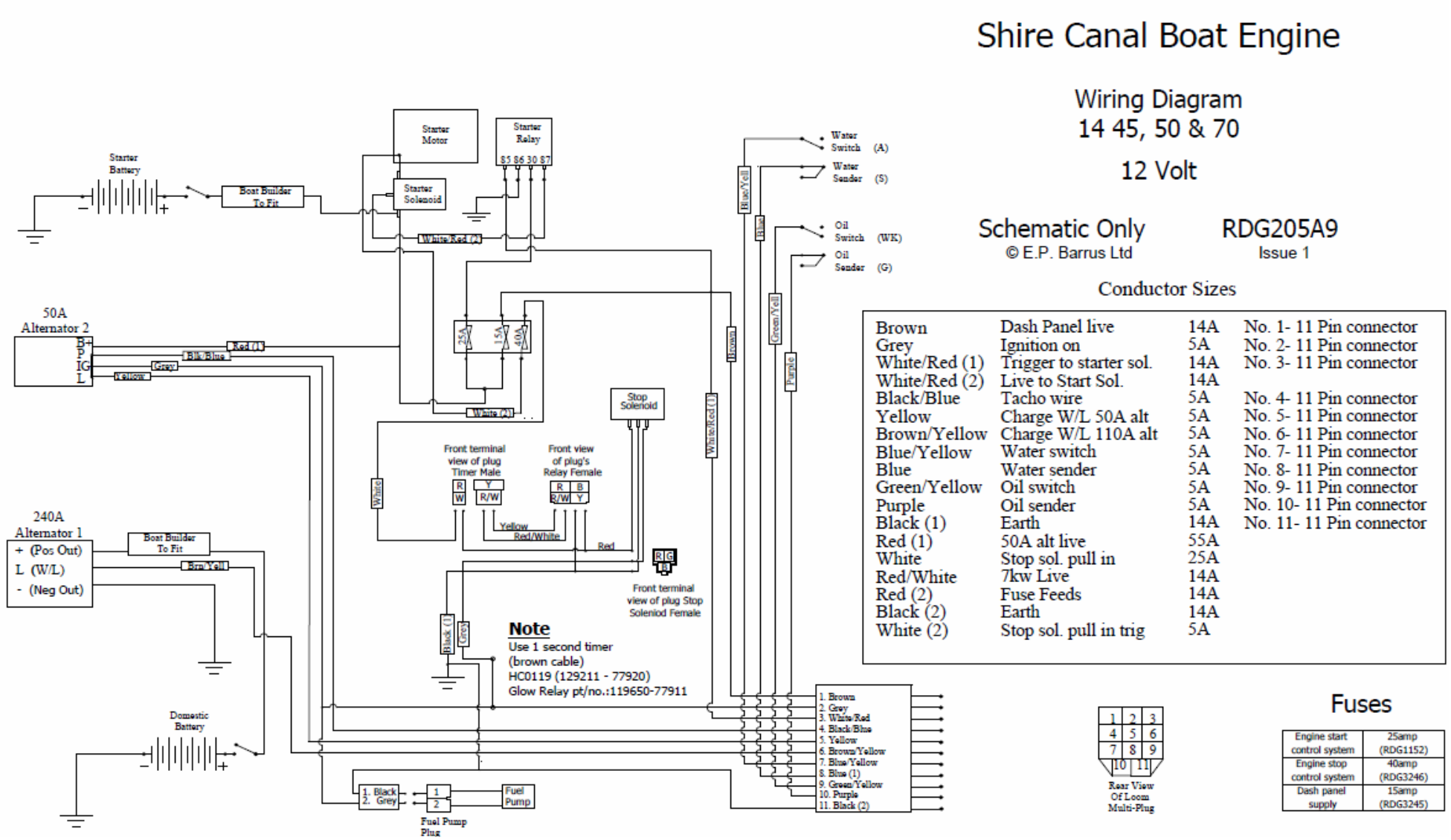

4. Standard Panel Wiring Diagram

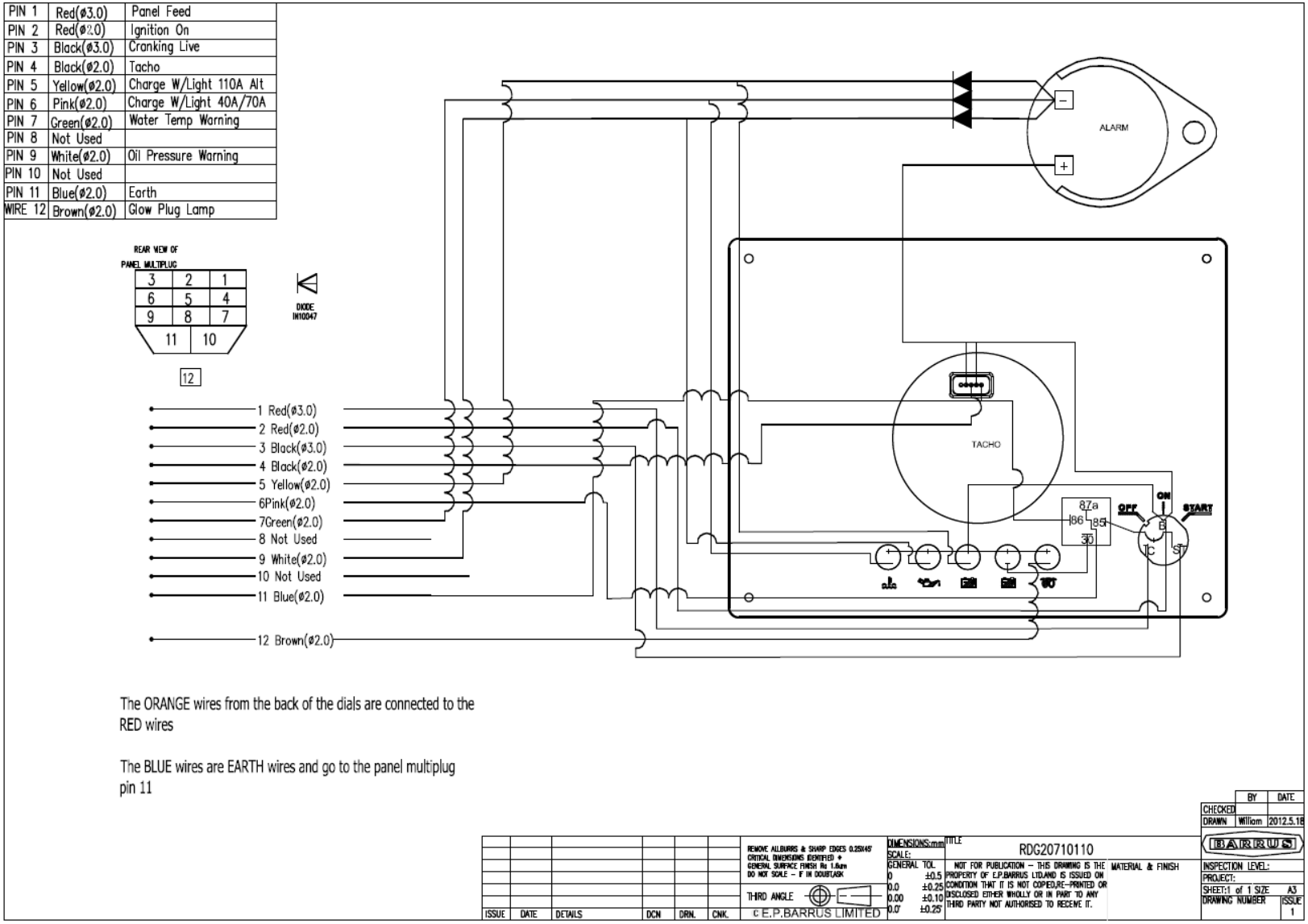

5. Deluxe Panel Wiring Diagram

PIN 1	Red(ø3.0)	Panel Feed
PIN 2	Red(ø2.0)	Ignition On
PIN 3	Black(ø3.0)	Cranking Live
PIN 4	Black(ø2.0)	Tacho
PIN 5	Yellow(ø2.0)	Charge W/Light 110A Alt
PIN 6	Pink(ø2.0)	Charge W/Light 40A/70A
PIN 7	Green(ø2.0)	Water Temp Warning
PIN 8	Black(ø2.0)	Engine temperature gauge signal
PIN 9	White(ø2.0)	Oil Pressure Warning
PIN 10	Black(ø2.0)	Oil pressure gauge signal
PIN 11	Blue(ø2.0)	Earth
WIRE 12	Brown(ø2.0)	Glow Plug Lamp

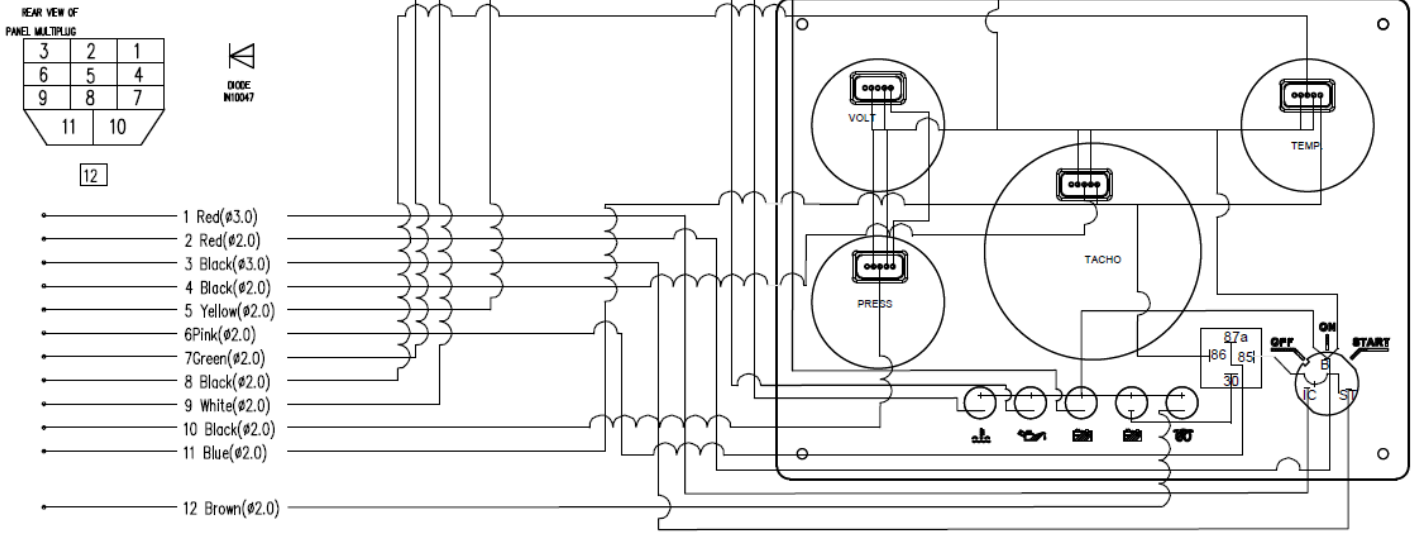

The ORANGE wires from the back of the dials are connected to the RED wires

The BLUE wires are EARTH wires and go to the panel multiplug pin 11

ISSUE	DATE	DETAILS	DCN	DRN.	CNK.

REMOVE ALL BURRS & SHARP EDGES 0.25X45°
CRITICAL DIMENSIONS IDENTIFIED ✦
GENERAL SURFACE FINISH Ra 1.6um
DO NOT SCALE – IF IN DOUBT,ASK

THIRD ANGLE

© E.P.BARRUS LIMITED

DIMENSIONS:mm
SCALE:

GENERAL TOL	
0	±0.5
0.0	±0.25
0.00	±0.10
0.0'	±0.25'

TITLE
RDG20710111

NOT FOR PUBLICATION – THIS DRAWING IS THE PROPERTY OF E.P.BARRUS LTD.AND IS ISSUED ON CONDITION THAT IT IS NOT COPIED,RE-PRINTED OR DISCLOSED EITHER WHOLLY OR IN PART TO ANY THIRD PARTY NOT AUTHORISED TO RECEIVE IT.

MATERIAL & FINISH

	BY	DATE
CHECKED		
DRAWN	William	2012.5.18

INSPECTION LEVEL:
PROJECT:
SHEET:1 of 1 SIZE A3
DRAWING NUMBER
ISSUE 1

6. RDG20710110 - Standard Panel

7. RDG20710111 – Deluxe Panel

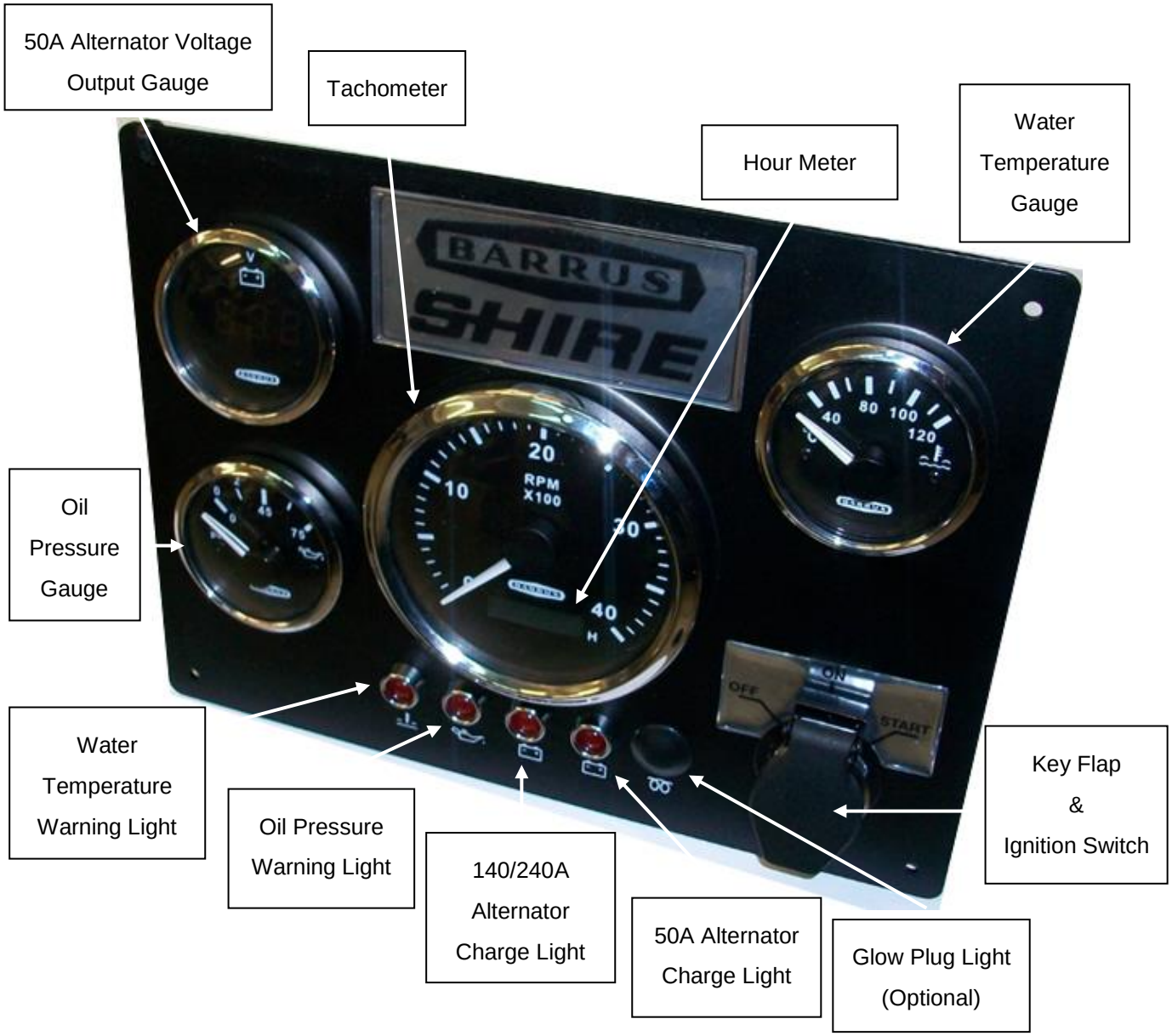

7. 8kW Wiring Diagram and Overall Dimensions

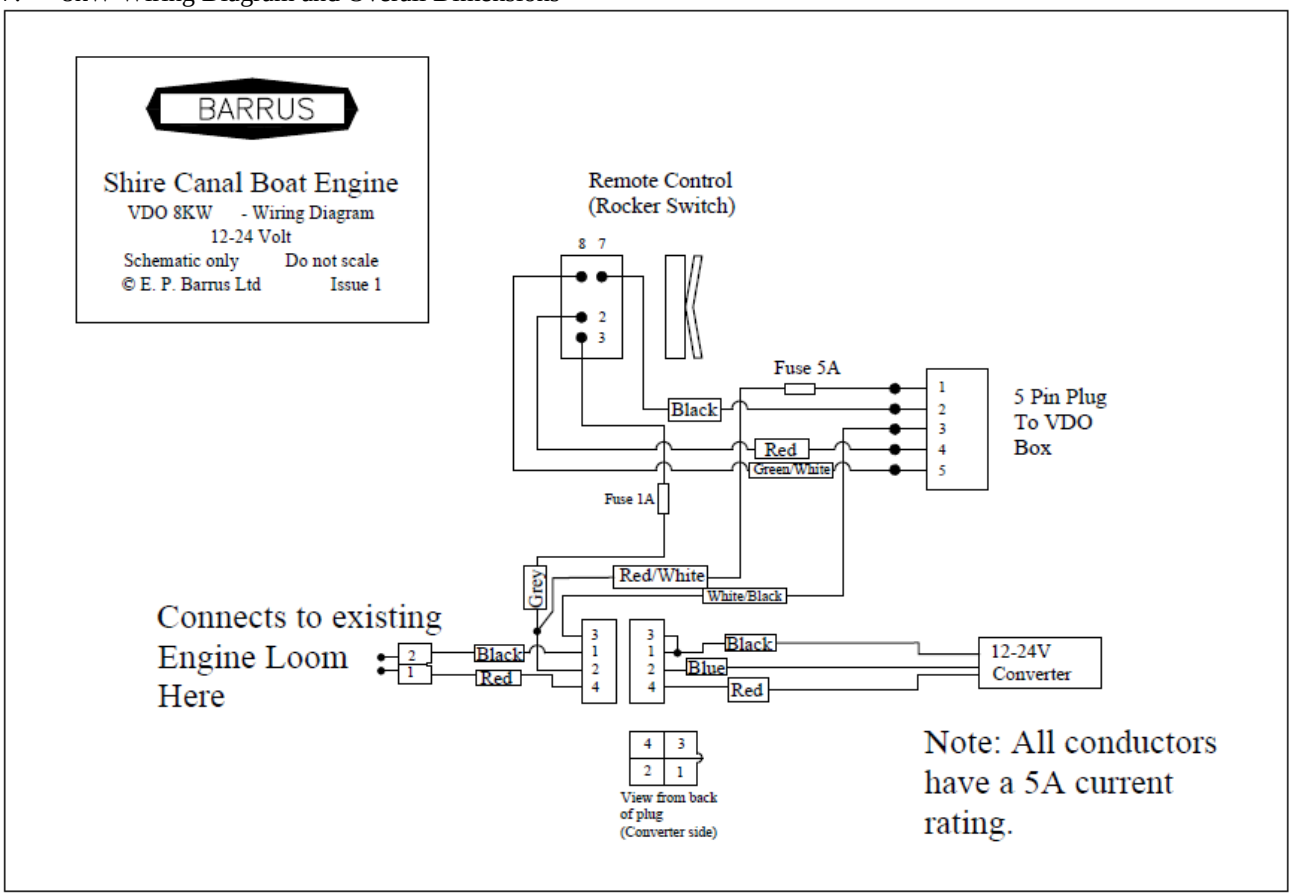

Figure 7-1: Travelpower wiring diagram

The above diagram shows 12/24 Volt part of the wiring for the 8kW Travel Power system. For the 230 Volt wiring diagram please refer to the Travel Power manual.

WARNING:
ALL HIGH VOLTAGE WIRING SYSTEMS SHOULD BE INSTALLED BY A QUALIFIED ELECTRICIAN.

8. 5kW Travel Power System

- This unit is excited by a 12V ignition operated supply the travel power installer can wire to a convenient plug on the existing loom for this purpose.
- When the 12V relay (RDG1396) is placed into the spare relay holder on the engine the black two way plug becomes live.
- The wire colours in the plug are: Black - Earth
  Red - Live

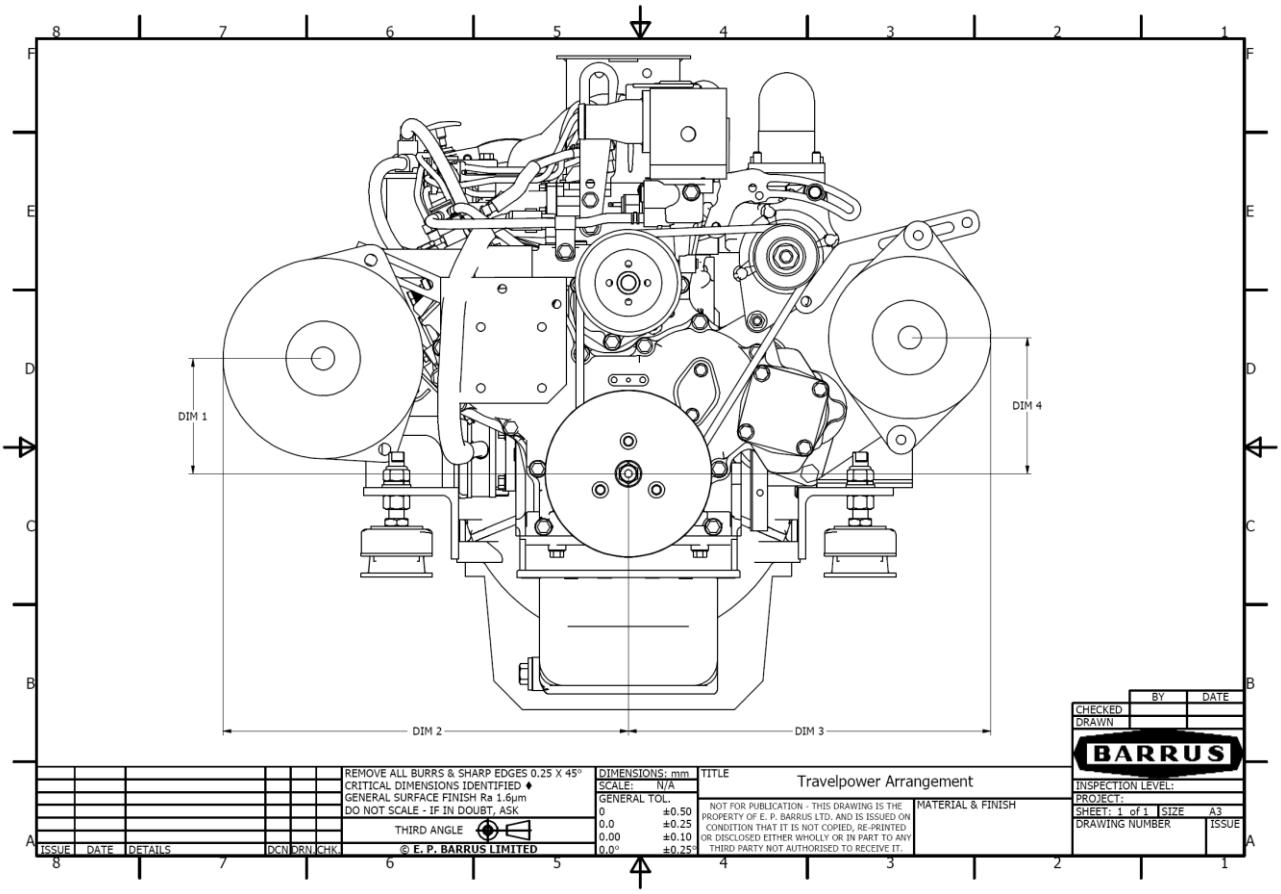

Figure 7-2: Travelpower dimension reference diagram

Sizes for the dimensions listed in figure 7-2 are as follows:

	3.5 kW	5 kW	7/8 kW
Dim 1	65 mm	65 mm	55 mm
Dim 2	390 mm	390 mm	470 mm
Dim 3 (140 Amp Alt)	420 mm		
Dim 3 (240 Amp Alt)	445 mm		
Dim 4 (140 Amp Alt)	135 mm		
Dim 4 (240 Amp Alt)	150 mm		

SECTION 8 – Dealer List

Area	Company	Telephone	Email
BERKSHIRE	Bluenine Marine	01189 406482	bluenine@marine7957.fsnet.co.uk
	Aquatec Marine	07880793686	mark@aquatecmarine.com
	Driveline Marine	0118 942 3877	tam@drivelinemarine.com
CHESHIRE	Nantwich Canal Centre	01270 625122	info@nantwichcc.com
CORNWALL	Black Dog Marine	01503 265898	blackdogmarine@googlemail.com
	Cellar Marine	01326 280214	john@cellarmarine.com
DERBYSHIRE	Midland Canal Centre	01283 701933	info@mccboats.co.uk
DEVON	Sleeman & Hawkin Ltd	01626 778266	keith@sleeman-hawkin.co.uk
ESSEX	French Marine Motors Ltd	01206 305233	chris@frenchmarine.com
	French Marine Motors Ltd	01255 850303	info@frenchmarine.com
HAMPSHIRE	Marine Power Ltd	0238 0403918	info@marine-power.co.uk
HERTFORDSHIRE	P & S Marine	01923 248372	(no email contact)
LEICESTERSHIRE	Foxton Boat Services Ltd	01162 792285	tony@foxton-boats.freeserve.co.uk
NORFOLK	French Marine Motors Ltd	01603 722079	info@frenchmarine.com
NORTHAMPTON	Grand Junction Boat Co.	01604 858043	grandjunco@talk21.com
NOTTINGHAM	Farndon Marina	01636 705483	info@farndonmarina.co.uk
STAFFORDSHIRE	JD Boat Services Ltd	01902 791811	jdboats@btinternet.com
	Stone Boatbuilding Company	01785 812688	sales@stonebuilding.co.uk
	Streethay Warf	01543 414770	pat@streethaywarf.freeserve.co.uk
WARWICKSHIRE	Barry Hawkins Narrowboats	01827 711762	boats@hawkinsyard.freeserve.co.uk
	Onboard Energy	02476 393333	sales@onboardenergy.com
	Valley Boat Services Ltd	07990528123	enquiries@valleycruises.co.uk
WEST MIDLANDS	Stephen Goldsbrough Boats	01564 778210	andy@sgboats.com
WORCESTERSHIRE	J L Pinder & Son	01527 876438	sales@jlpinderandsons.co.uk
	Starline Narrowboats	01684 874774	narrowboats@starline.demon.co.uk
YORKSHIRE	Rodley Boat Centre	01132 576132	John.snowdenz@ntlworld.com
MONMOUTHSHIRE	Castle Narrowboats	01873 830001	castlenarrowboats@btinternet.com
EIRE	Dun Laoghaire Marine Services	00353 12104776	info@dlms.ie
EIRE	O'Sullivans Marine	003536 67124524	brian@sulliansmarine.com

SECTION 9 – Shire Service Parts

Model	30/35	38	40	45/50
Primary Fuel Filter	RDG9188346	Not standard fitment	RDG9188346	RDG9188346
Secondary Fuel Filter	119802-55801	119802-55801	119802-55801	119802-55801
50A Alt Belt	25132-003700	RDG6079	RDG6079	RDG6079
140A Alt Belt	RDG6076	RDG6076	RDG6076	
240A Alt Belt				RDG0047498
Air Filter Element	RDG5795	RDG5795	RDG5795	RDG5795
Oil Filter	129150-35153	129150-35153	129150-35153	129150-35153

Fuses

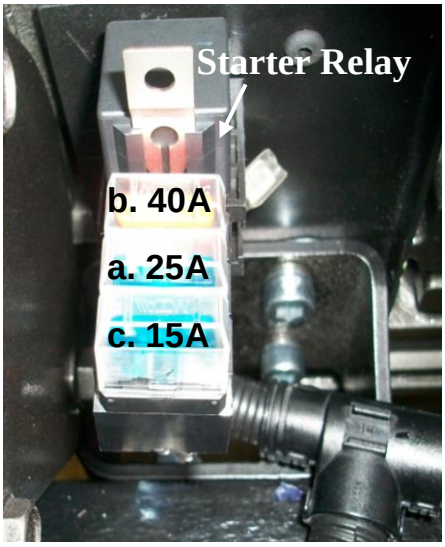

The electrical system is fitted with three or four blade type fuses,

a. Engine start control system 25amp (RDG1152)

b. Engine stop control system 40amp (RDG3246)

c. Dash Panel supply 15amp (RDG3245)

7/8kw Alternator sub-system 15amp (RDG3245)

3.5kw Travel Power alternator belt is RDG0047511.

5kw Travel Power alternator belt is RDG0047511.

7/8kw Travel Power alternator belt is RDG6082.

Engine oil is available from your Shire dealer in convenient 5 litre containers - part number RDG6110.

Diesel fuel additive is available from your Shire dealer in a handy 375ml container - part number RDG80210219.

SHIRE®

SERVICE RECORD CARD

Model:.....

Engine No:.....

EPB Stamp PDI **Actual Hours:** **Signed:**	**Dealer Stamp** 1st **Actual Hours:** **Signed:**
Dealer Stamp 2nd **Actual Hours:** **Signed:**	**Dealer Stamp** 3rd **Actual Hours:** **Signed:**
Dealer Stamp 4th **Actual Hours:** **Signed:**	**Dealer Stamp** 5th **Actual Hours:** **Signed:**
Dealer Stamp 6th **Actual Hours:** **Signed:**	**Dealer Stamp** 7th **Actual Hours:** **Signed:**

Please refer to Owners Manual for service intervals