SHIRE

Scan here to find your local dealer

SHIRE 45

45hp @ 2800rpm

RCDII Emission Compliant

Type	4 stroke water cooled diesel
Number of Cylinders	4
Bore x Stroke	88mm x 90mm
Displacement	2190 cc
Max HP (ISO 3046/1)	45 hp @ 2800rpm
Peak Torque	97lb ft / 1600rpm
Combustion	Direct Injection
Electrical System	Starting motor D.C. twin 12V 50 amp & 12V 170 amp alternators
Cooling System	Keel or skin tank
Lubrication System	Forced lubrication by trochoid pump
Gearbox	PRM 150 Hydraulic
Reduction Ratio	2:1
Dry Weight (inc gearbox)	278 kg

Power Curves / Fuel Consumption

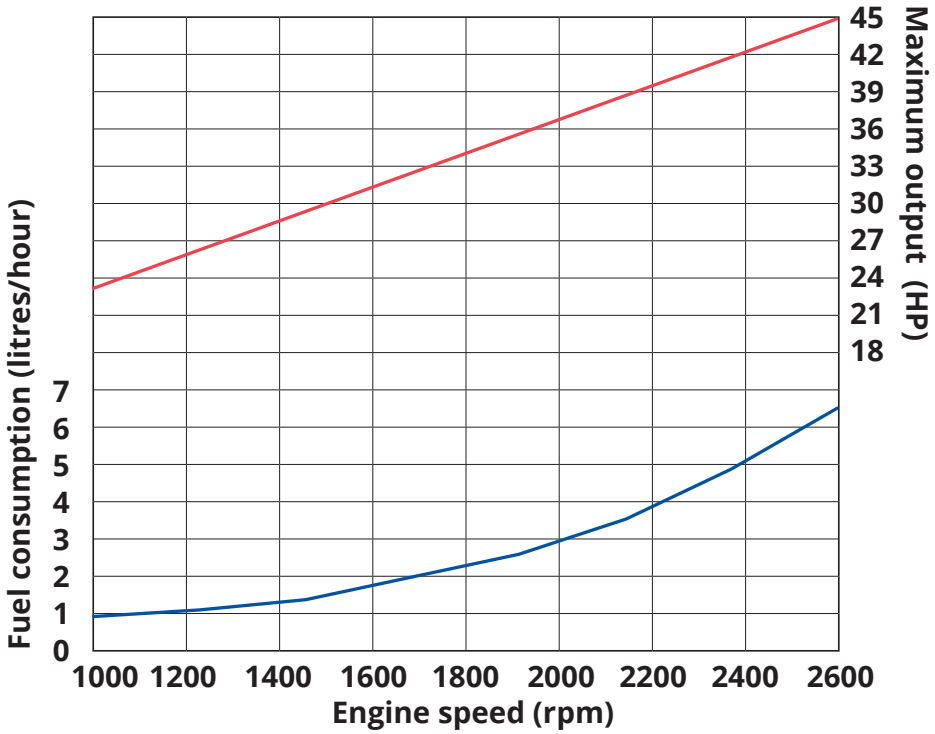

PROUD MEMBER OF BRITISH MARINE LEADING THE INDUSTRY

Specifications and/or prices are subject to change without notice.
Every effort is made to produce sales literature and price lists that are accurate and current.

Shire - Engineered and manufactured in the UK by Barrus
E. P. Barrus Ltd., Glen Way, Launton Road, Bicester, Oxfordshire, OX26 4UR Tel: 01869 363682 www.barrus.co.uk

Powered by BARRUS

Dimensions

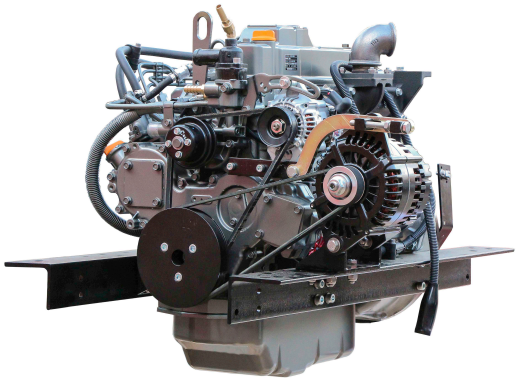

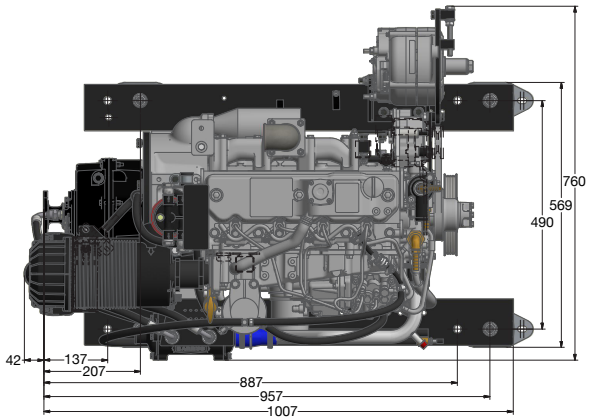

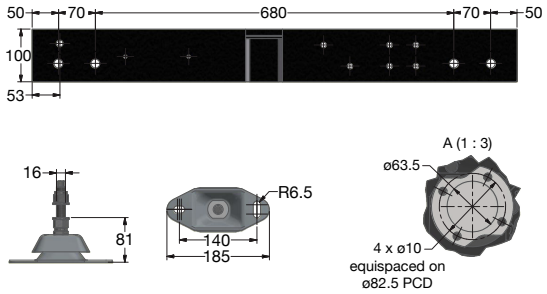

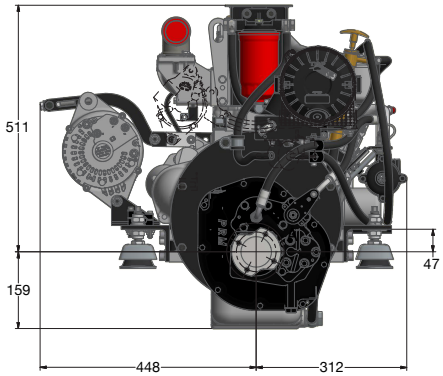

12 volt electric start	Standard
Twin alternators	Standard
Electric stop	Standard
Heavy duty rails & flexible feet	Standard
Morse type cable fitting on speed & gear control	Standard
Centaflex flexible drive coupling	Optional
Low noise air silencer & cleaner	Standard
Calorifier connections	Standard
Dry exhaust flange	Standard
Dry exhaust silencer	Optional
Dry Exhaust Hospital Silencer	Optional
Flexible exhaust pipe with heat shield	Optional
Engine oil extraction pump	Standard
Flexible fuel lines to RCD	Standard
Fuel pre filter and water drain	Standard
Deluxe control panel	Standard
Deep sump	Standard
Shallow sump	Optional
350 hour oil change interval	Standard
Automatic belt tensioner for 170 amp alternator	Optional
5 kW 230 V alternator	Optional
12 V 240 amp or 24 V 120 amp alternators	Optional

Features & Options

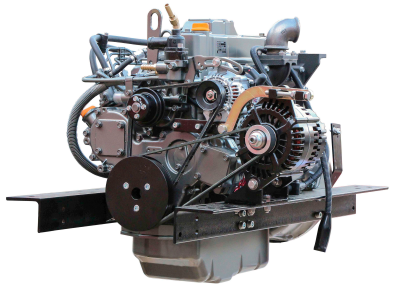

SHIRE 45
45hp @ 2800rpm

Dry manifold

Fuel filter with water drain separator

PRM 150 hydraulic gearbox

Single thermostat

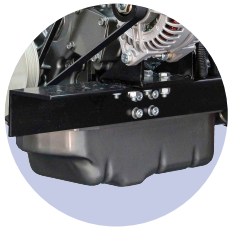

Deep sump

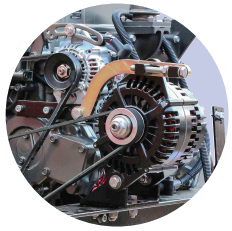

Twin alternators